(19) Japan Patent Office (JP) (12) Unexamined Patent Applications (A) (11) Japanese Patent Application Kokai (Laid-open) Publication

Publication of the Unexamined Patent Application No. H 11 (1998) - 331305

(43) Date of publication: Heisei Dynasty 11th year (1999) 11 (month) 30 (day)

(51) Int. Cl.[6]	Identification code	FI
H 0 4 L 29 / 06	H 0 4 L 13 / 00	305 C
H 0 4 J 3 / 00	H 0 4 J 3 / 00	C
H 0 4 L 29 / 08	H 0 4 L 13 / 00	307 Z

Examination request: No examination request received yet. Quantity of the claims: 99 OL (29 pages in total)

(21) Patent application filing No.: Patent Application H 10 (1998) - 125633 (22) Date of application filing: Heisei Dynasty 10th year (1998) 5 (month) 8 (day)	(71) Applicant: 000002185 Sony Co., Ltd 6 - 7 - 35, Kitashinagawa. Shinagawa - ku, Tokyo (72) Name of the inventor: Imai Kenichi 6 - 7 - 35, Kitashinagawa. Shinagawa - ku, Tokyo Inside Sony Co., Ltd (72) Name of the inventor: Tsuji Minoru 6 - 7 - 35, Kitashinagawa. Shinagawa - ku, Tokyo Inside Sony Co., Ltd (72) Name of the inventor: Imai Kenichi 6 - 7 - 35, Kitashinagawa. Shinagawa - ku, Tokyo Inside Sony Co., Ltd (72) Name of the inventor: Koike Takashi 6 - 7 - 35, Kitashinagawa. Shinagawa - ku, Tokyo Inside Sony Co., Ltd (74) Agent: Patent attorney: Inamoto Yoshio

(54) [Title of the invention]

Transmitting apparatus and transmitting method, receiving apparatus and receiving method, as well as providing medium

(57) [Abstract]

[Problem to be solved]

To decode and reproduce the digital audio signals in real time.

[Solution means]

The transmission rate of a transmission line will be detected out, and a selection instructing unit 55 instructs, to an encoding selecting circuit 56, a coding method which will be possible to provide the coded data having a bit rate corresponding to that detected transmission rate.

According to the instruction from the selection instructing unit 55, the encoding selecting circuit 56 will control a switch 52. According to the control from the encoding selecting circuit 56, the switch 52 will select one of a plurality of encoders 53_1 to 53_N, as a result, each frame of the audio signal cut out by a frame cutting circuit 51 will be supplied to the encoder selected by the switch for encoding thereof. Such coded data can be outputted after an ID corresponding to that coding method has been added in a header inserting circuit 54.

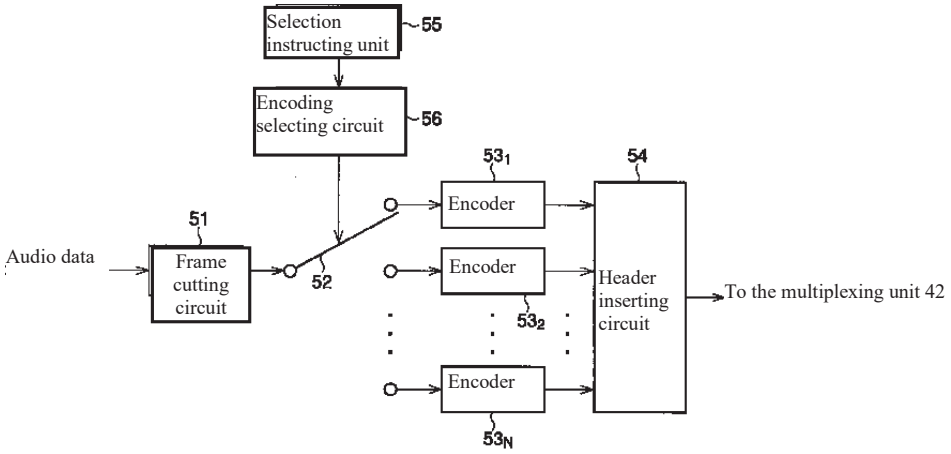

Encoding unit 41m

[Scope of the patent claims]

[Claim 1]

A transmitting apparatus for outputting the coded data resulted from encoding the time series digital signal, wherein such transmitting apparatus will be equipped with: a plurality of coding means for respectively encoding the above-mentioned digital signal with a plurality of coding methods and outputting the above-mentioned coded data, the instructing means for instructing the coding method for the purpose of encoding a part or all of the above-mentioned digital signal from the above-mentioned plurality of coding methods, the selecting means for selecting the above-mentioned coded data according to the coding method instructed by the above-mentioned instructing means, the adding means for adding the coding method information indicating the coding method for the coded data to the above-mentioned coded data selected by the above-mentioned selecting means, and the outputting means for outputting the above-mentioned coded data to which the above-mentioned coding method information is added.

[Claim 2]

A transmitting apparatus as described in the Claim 1, wherein the above-mentioned instructing means will instruct a coding method which encodes the above-mentioned digital signal based on the processing capability of the receiving apparatus which receives the above-mentioned coded data.

[Claim 3]

A transmitting apparatus as described in the Claim 1, wherein the above-mentioned instructing means will instruct a coding method which encodes the digital signal based on the above-mentioned digital signal.

[Claim 4]

A transmitting apparatus as described in the Claim 1, wherein the above-mentioned instructing means will instruct a coding method which encodes the above-mentioned digital signal based on the operation instructing the above-mentioned coding method.

[Claim 5]
A transmitting apparatus as described in the Claim 1, wherein the above-mentioned instructing means will instruct a coding method which encodes the above-mentioned digital signal based on the request from a receiving apparatus which receives the above-mentioned coded data.

[Claim 6]
A transmitting apparatus as described in the Claim 1, wherein, in the case if the above-mentioned receiving apparatus which receives the above-mentioned coded data functions as a decoding apparatus for decoding the above-mentioned coded data by executing a computer program, at the time when the above-mentioned receiving apparatus does not have a computer program for the purpose of functioning as a decoding apparatus for decoding the above-mentioned coded data outputted by the above-mentioned outputting means, the transmitting means for transmitting the computer program to the above-mentioned receiving apparatus will be further equipped.

[Claim 7]
A transmitting apparatus as described in the Claim 1, wherein, in the case if the above-mentioned receiving apparatus which receives the above-mentioned coded data functions as a decoding apparatus which decodes the above-mentioned coded data by executing the computer program, at the time when the above-mentioned receiving apparatus does not have a computer program for the purpose of functioning as a decoding apparatus for decoding the above-mentioned coded data outputted by the above-mentioned outputting means, the changing means for changing the above-mentioned coded data outputted by the above-mentioned outputting means to the data coded by a coding method which can be decoded by the above-mentioned receiving apparatus will be further equipped.

[Claim 8]
A transmitting apparatus as described in the Claim 7, wherein, for the above-mentioned receiving apparatus not having a computer program to function as a decoding apparatus for decoding the above-mentioned coded data outputted by the above-mentioned outputting means, after the coded data by the coding method changed by the above-mentioned changing means were provided, at the time when providing the coded data to the receiving apparatus again, the coding method before change will not be used.

[Claim 9]
A transmitting apparatus as described in the Claim 1, wherein the above-mentioned selecting means will select one of the above-mentioned plurality of coding means which performs the coding by the coding method instructed by the above-mentioned instructing means and encode the above-mentioned digital signal, and the above-mentioned outputting means will output the above-mentioned coded data outputted by that above-mentioned coding means selected.

[Claim 10]
A transmitting apparatus as described in the Claim 1, wherein a plurality of storing means for storing a plurality of coded data obtained through encoding the above-mentioned digital signal by the above-mentioned plurality of coding means will be further equipped, and the above-mentioned selecting means will select one of a plurality of coded data stored in a plurality of storing means by the coding method instructed by the above-mentioned instructing means.

[Claim 11]
A transmitting apparatus as described in the Claim 1, wherein a plurality of groups of the above-mentioned plurality of the coding means, the instructing means, the selecting means, and the adding means will be equipped; and the multiplexing means for multiplexing the output of each group of the above-mentioned adding means will be further equipped.

[Claim 12]
A transmitting method for outputting the coded data resulted from encoding the time series digital signal, wherein the above-mentioned transmitting apparatus will be equipped with a plurality of coding means for respectively encoding the above-mentioned digital signal with a plurality of coding methods and outputting the above-mentioned coded data;

the instructing step for instructing the coding method for the purpose of encoding a part or all of the above-mentioned digital signal from the above-mentioned plurality of coding methods,

the selecting step for selecting the above-mentioned coded data according to the coding method instructed by the above-mentioned instructing step,

the adding step for adding the coding method information indicating the coding method for the coded data to the above-mentioned coded data selected by the above-mentioned selecting step,

and the outputting step for outputting the above-mentioned coded data to which the above-mentioned coding method information is added will be equipped.

[Claim 13]
A transmitting method as described in the Claim 12, wherein the above-mentioned instructing step will instruct a coding method which encodes the above-mentioned digital signal based on the processing capability of the receiving apparatus which receives the above-mentioned coded data.

[Claim 14]
A transmitting method as described in the Claim 12, wherein in the above-mentioned instructing step, a coding method which encodes the digital signal will be instructed based on the above-mentioned digital signal.

[Claim 15]
A transmitting method as described in the Claim 12, wherein in the above-mentioned instructing step, a coding method which encodes the above-mentioned digital signal will be

instructed based on the operation instructing the above-mentioned coding method.

[Claim 16]
A transmitting method as described in the Claim 12, wherein in the above-mentioned instructing step, a coding method which encodes the above-mentioned digital signal will be instructed based on the request from a receiving apparatus which receives the above-mentioned coded data.

[Claim 17]
A transmitting method as described in the Claim 12, wherein, in the case if the above-mentioned receiving apparatus which receives the above-mentioned coded data functions as a decoding apparatus for decoding the above-mentioned coded data by executing a computer program, at the time when the above-mentioned receiving apparatus does not have a computer program for the purpose of functioning as a decoding apparatus for decoding the above-mentioned coded data outputted in the above-mentioned outputting step, the transmitting step for transmitting the computer program to the above-mentioned receiving apparatus will be further equipped.

[Claim 18]
A transmitting method as described in the Claim 12, wherein, in the case if the above-mentioned receiving apparatus which receives the above-mentioned coded data functions as a decoding apparatus which decodes the above-mentioned coded data by executing the computer program, at the time when the above-mentioned receiving apparatus does not have a computer program for the purpose of functioning as a decoding apparatus for decoding the above-mentioned coded data outputted in the above-mentioned outputting step, the changing step for changing the above-mentioned coded data outputted in the above-mentioned outputting step to the data coded by a coding method which can be decoded by the above-mentioned receiving apparatus will be further equipped.

[Claim 19]
A transmitting method as described in the Claim 18, wherein, for the above-mentioned receiving apparatus not having a computer program to function as a decoding apparatus for decoding the above-mentioned coded data outputted in the above-mentioned outputting step, after the coded data by the coding method changed by the above-mentioned changing step were provided, at the time when providing the coded data to the receiving apparatus again, the coding method before change will not be used.

[Claim 20]
A transmitting method as described in the Claim 12, wherein, in the above-mentioned selecting step, one of the above-mentioned plurality of coding step which performs the coding by the coding method instructed by the above-mentioned instructing step will be selected, and the above-mentioned digital signal will be encoded; and in the above-mentioned outputting step, the above-mentioned coded data outputted by that above-mentioned coding step selected will be outputted.

[Claim 21]
A transmitting method as described in the Claim 12, wherein the above-mentioned transmitting apparatus will be further equipped with a plurality of storage step for storing a plurality of coded data obtained through encoding the above-mentioned digital signal in the above-mentioned plurality of coding steps, and in the above-mentioned selecting step, one of a plurality of coded data stored in a plurality of storage step by the coding method instructed by the above-mentioned instructing step will be selected.

[Claim 22]
A providing medium for providing a computer program for causing a computer to output the coded data obtained by encoding the time series digital signal, wherein the above-mentioned computer will be equipped with a plurality of coding means for respectively encoding the above-mentioned digital signal with a plurality of coding methods and outputting the above-mentioned coded data; and a computer program equipped with the instructing step for instructing the coding method for the purpose of encoding a part or all of the above-mentioned digital signal from the above-mentioned plurality of coding methods, the selecting step for selecting the above-mentioned coded data according to the coding method instructed by the above-mentioned instructing step, the adding step for adding the coding method information indicating the coding method for the coded data to the above-mentioned coded data selected by the above-mentioned selecting step, and the outputting step for outputting the above-mentioned coded data to which the above-mentioned coding method information is added will be provided.

[Claim 23]
A providing medium as described in the Claim 22, wherein the above-mentioned instructing step will instruct a coding method which encodes the above-mentioned digital signal based on the processing capability of the receiving apparatus which receives the above-mentioned coded data.

[Claim 24]
A providing medium as described in the Claim 22, wherein in the above-mentioned instructing step, a coding method which encodes the digital signal will be instructed based on the above-mentioned digital signal.

[Claim 25]
A providing medium as described in the Claim 22, wherein in the above-mentioned instructing step, a coding method which encodes the above-mentioned digital signal will be instructed based on the operation instructing the above-mentioned coding method.

[Claim 26]
A providing medium as described in the Claim 22, wherein in the above-mentioned instructing step, a coding method which encodes the above-mentioned digital signal will be instructed based on the request from a receiving apparatus which receives the above-

mentioned coded data.

[Claim 27]
A providing medium as described in the Claim 22, wherein, in the case if the above-mentioned receiving apparatus which receives the above-mentioned coded data functions as a decoding apparatus for decoding the above-mentioned coded data by executing an application program, at the time when the above-mentioned receiving apparatus does not have an application program for the purpose of functioning as a decoding apparatus for decoding the above-mentioned coded data outputted in the above-mentioned outputting step, the above-mentioned computer program will be further equipped with the transmitting step for transmitting that application program to the above-mentioned receiving apparatus.

[Claim 28]
A providing medium as described in the Claim 22, wherein, in the case if the above-mentioned receiving apparatus which receives the above-mentioned coded data functions as a decoding apparatus which decodes the above-mentioned coded data by executing the application program, at the time when the above-mentioned receiving apparatus does not have an application program for the purpose of functioning as a decoding apparatus for decoding the above-mentioned coded data outputted in the above-mentioned outputting step, the above-mentioned computer program will be further equipped with the changing step for changing the above-mentioned coded data outputted in the above-mentioned outputting step to the data coded by a coding method which can be decoded by the above-mentioned receiving apparatus.

[Claim 29]
A providing medium as described in the Claim 28, wherein, for the above-mentioned receiving apparatus not having an application program to function as a decoding apparatus for decoding the above-mentioned coded data outputted in the above-mentioned outputting step, after the coded data by the coding method changed by the above-mentioned changing step were provided, at the time when providing the coded data to the receiving apparatus again, the coding method before change will not be used.

[Claim 30]
A providing medium as described in the Claim 22, wherein, in the above-mentioned selecting step, one of the above-mentioned plurality of coding step which performs the coding by the coding method instructed by the above-mentioned instructing step will be selected, and the above-mentioned digital signal will be encoded; and in the above-mentioned outputting step, the coded data obtained as a result will be outputted.

[Claim 31]
A providing medium as described in the Claim 22, wherein the above-mentioned computer will be further equipped with a plurality of storage step for storing a plurality of coded data obtained through encoding the above-mentioned digital signal in the above-mentioned plurality of coding steps, and in the above-mentioned selecting step, one of a plurality of

coded data stored in a plurality of storage step by the coding method instructed by the above-mentioned instructing step will be selected.

[Claim 32]
A receiving apparatus for receiving and processing the coded data obtained by encoding a part or all of a time series digital signal with one of a plurality of coding methods, wherein such receiving apparatus will be equipped with the extracting means for extracting the coding method information indicating the coding method used to obtain that coded data added to the above-mentioned coded data, the recognizing means for recognizing the decoding method for decoding the above-mentioned coded data based on the above-mentioned coding method information, and the decoding means for decoding the above-mentioned coded data according to the above-mentioned decoding method recognized by the above-mentioned recognition means.

[Claim 33]
A receiving apparatus as described in the Claim 32, wherein, in the case when the transmitting apparatus for transmitting the above-mentioned coded data instructs the coding method of the above-mentioned digital signal based on the processing capacity of the transmission destination, the processing capability transmitting means for transmitting its own processing capability to the above-mentioned transmitting apparatus will be further equipped.

[Claim 34]
A receiving apparatus as described in the Claim 32, wherein the request transmitting means for transmitting the request of the coding method used for coding the above-mentioned digital signal to the transmitting apparatus which transmits the above-mentioned coded data will be further equipped.

[Claim 35]
A receiving apparatus as described in the Claim 32, wherein, in the case when the information processing apparatus functions as the above-mentioned decoding means by executing a computer program, at the time when it does not have a computer program for the purpose of functioning as the above-mentioned decoding means corresponding to the decoding method which decodes the above-mentioned coded data, a receiving means for receiving a computer program for the purpose of functioning as the above-mentioned decoding means corresponding to a decoding method for decoding the above-mentioned coded data transmitted by the transmitting apparatus which transmits the above-mentioned coded data,and the incorporating means for incorporating the computer program received by the above-mentioned receiving means into the above-mentioned information processing apparatus will be further equipped.

[Claim 36]
A receiving apparatus as described in the Claim 32, wherein, in the case when a plurality of the above-mentioned coded data is multiplexed, a plurality of groups of the above-mentioned

extracting means, recognizing means, and decoding means will be equipped, and the separating means for separating and supplying a plurality of the above-mentioned multiplexed data to each group of the above-mentioned extracting means will be equipped.

[Claim 37]
A receiving method for receiving and processing the coded data obtained by encoding a part or all of a time series digital signal with one of a plurality of coding methods, wherein such receiving will be equipped with the extracting step for extracting the coding method information indicating the coding method used to obtain that coded data added to the above-mentioned coded data, the recognizing step for recognizing the decoding method for decoding the above-mentioned coded data based on the above-mentioned coding method information, and the decoding step for decoding the above-mentioned coded data according to the above-mentioned decoding method recognized by the above-mentioned recognition step.

[Claim 38]
A receiving method as described in the Claim 37, wherein, in the case when the transmitting apparatus for transmitting the above-mentioned coded data instructs the coding method of the above-mentioned digital signal based on the processing capacity of the transmission destination, the processing capability transmitting step for transmitting its own processing capability to the above-mentioned transmitting apparatus will be further equipped.

[Claim 39]
A receiving method as described in the Claim 37, wherein the request transmitting step for transmitting the request of the coding method used for coding the above-mentioned digital signal to the transmitting apparatus which transmits the above-mentioned coded data will be further equipped.

[Claim 40]
A receiving method as described in the Claim 37, wherein, in the case when the information processing apparatus functions as the above-mentioned decoding step by executing a computer program, at the time when it does not have a computer program for the purpose of functioning as the above-mentioned decoding step corresponding to the decoding method which decodes the above-mentioned coded data, a receiving step for receiving a computer program for the purpose of functioning as the above-mentioned decoding step corresponding to a decoding method for decoding the above-mentioned coded data transmitted by the transmitting apparatus which transmits the above-mentioned coded data, and the incorporating step for incorporating the computer program received by the above-mentioned receiving step into the above-mentioned information processing apparatus will be further equipped.

[Claim 41]
A providing medium for providing the computer program in a computer for the purpose of

processing the coded data obtained by encoding a part or all of a time series digital signal with one of a plurality of coding methods, wherein such providing medium will provide a computer program equipped with the extracting step for extracting the coding method information indicating the coding method used to obtain that coded data added to the above-mentioned coded data, the recognizing step for recognizing the decoding method for decoding the above-mentioned coded data based on the above-mentioned coding method information, and the decoding step for decoding the above-mentioned coded data according to the above-mentioned decoding method recognized by the above-mentioned recognition step.

[Claim 42]
A providing medium as described in the Claim 41, wherein, in the case when the transmitting apparatus for transmitting the above-mentioned coded data instructs the coding method of the above-mentioned digital signal based on the processing capacity of the transmission destination, the above-mentioned computer program will be further equipped with the processing capability transmitting step for transmitting its own processing capability to the above-mentioned transmitting apparatus.

[Claim 43]
A providing medium as described in the Claim 41, wherein the above-mentioned computer program will be further equipped with the request transmitting step for transmitting the request of the coding method used for coding the above-mentioned digital signal to the transmitting apparatus which transmits the above-mentioned coded data.

[Claim 44]
A providing medium as described in the Claim 41, wherein, in the case when the above-mentioned computer program does not have the program module for the purpose of functioning as the above-mentioned decoding step corresponding to the decoding method which decodes the above-mentioned coded data, a receiving step for receiving a program module for the purpose of functioning as the above-mentioned decoding step corresponding to a decoding method for decoding the above-mentioned coded data transmitted by the transmitting apparatus which transmits the above-mentioned coded data, and the incorporating step for incorporating the program module received by the above-mentioned receiving step will be further equipped.

[Claim 45] A providing medium for providing the coded data in which the time series digital signals are encoded, wherein, the coding method for encoding a part or all of the above-mentioned digital signal will be instructed from a plurality of coding methods, the coded data which coded the above-mentioned digital signal will be selected by the above-mentioned instructed coding method, the above-mentioned coded data and the coding method information obtained by adding the coding method information indicating the coding method for that coded data to the above-mentioned coded data selected will be provided.

[Claim 46]
A transmitting apparatus for transmitting the coded data obtained by encoding a digital signal via a predetermined transmission line, wherein such transmitting apparatus will be equipped with a plurality of coding means for respectively encoding the above-mentioned digital signal with a plurality of coding methods and outputting the above-mentioned coded data, the detecting means for detecting out a transmission rate of the above-mentioned transmission line, the selecting means for selecting one of the above-mentioned plurality of coding methods which will be possible to provide the coded data having a bit rate corresponding to the transmission rate of the above-mentioned transmission line, and the transmitting means for transmitting the above-mentioned coded data obtained with the coding method selected by the above-mentioned selecting means.

[Claim 47]
A transmitting apparatus as described in the Claim 46, wherein the above-mentioned selecting means will select one of the above-mentioned plurality of coding means which outputs the coded data having a bit rate corresponding to the transmission rate of the above-mentioned transmission line, thereby causing the above-mentioned digital signal to be encoded by the selected coding means, and the above-mentioned transmitting means will transmit the above-mentioned coded data outputted from the above-mentioned coding means selected.

[Claim 48]
A transmitting apparatus as described in the Claim 46, wherein a plurality of storing means for storing a plurality of coded data resulted from respectively encoding the above-mentioned digital signal by the above-mentioned plurality of coding means will be equipped, the above-mentioned selecting means will select, from among a plurality of coded data stored in the above-mentioned plurality of storing means, one which has a bit rate corresponding to the transmission rate of the above-mentioned transmission line.

[Claim 49]
A transmitting apparatus as described in the Claim 46, wherein the above-mentioned detecting means will detect out the transmission rate of the above-mentioned transmission line by determining a communication time required for transferring a predetermined amount of data between the above-mentioned transmitting apparatus and the receiving apparatus for receiving the above-mentioned coded data and deriving the transmission rate based on the communication time.

[Claim 50]
A transmitting apparatus as described in the Claim 49, wherein the above-mentioned detecting means will determine the above-mentioned communication time by measuring the same.

[Claim 51]
A transmitting apparatus as described in the Claim 49, wherein, in the case if the data

transferred between the above-mentioned transmitting apparatus and the above-mentioned receiving apparatus for receiving the above-mentioned coded data are added with the transmission time at which the above-mentioned data has been transmitted, the above-mentioned detecting means will determine the above-mentioned communication time based on the above-mentioned transmission time.

[Claim 52]
A transmitting apparatus as described in the Claim 46, wherein, in the case when the above-mentioned transmitting means transmits the above-mentioned coded data while securing a predetermined transmission rate for the above-mentioned transmission line, the above-mentioned selecting means will select one of the above-mentioned plurality of coding methods which will be possible to provide the coded data having a bit rate corresponding to the above-mentioned predetermined transmission rate.

[Claim 53]
A transmitting apparatus as described in the Claim 46, wherein at the time of start of transmission of the above-mentioned coded data, the above-mentioned selecting means will select the above-mentioned coding method capable of providing the coded data having a bit rate corresponding to the transmission rate of the above-mentioned transmission line detected out by the above-mentioned detecting means.

[Claim 54]
A transmitting apparatus as described in the Claim 46, wherein after the start of transmission of the above-mentioned coded data, the above-mentioned selecting means will change the selection of the above-mentioned coding method based on the transmission rate of the above-mentioned transmission line detected out by the above-mentioned detecting means.

[Claim 55]
A transmitting apparatus as described in the Claim 54, wherein the above-mentioned detecting means will detect out the transmission rate of the above-mentioned transmission line by determining a communication time required for transferring a predetermined amount of data between the above-mentioned transmitting apparatus and the receiving apparatus for receiving the above-mentioned coded data and deriving the transmission rate based on the communication time.

[Claim 56]
A transmitting apparatus as described in the Claim 54, wherein the above-mentioned detecting means will detect out the transmission rate of the above-mentioned transmission line whenever the data are transferred between the above-mentioned transmitting apparatus and the receiving apparatus for receiving the above-mentioned coded data, and the above-mentioned selecting means will change the selection of the coding method based on the transmission rate of the above-mentioned transmission line whenever the transmission rate of the above-mentioned transmission line is detected out by the above-mentioned detecting means.

[Claim 57]
A transmitting apparatus as described in the Claim 54, wherein the above-mentioned detecting means will detect out the transmission rate of the above-mentioned transmission line between the above-mentioned transmitting apparatus and the receiving apparatus for receiving the above-mentioned coded data, and the above-mentioned selecting means will change the selection of the coding method based on the transmission rate of the above-mentioned transmission line whenever the transmission rate of the above-mentioned transmission line is detected out by the above-mentioned detecting means a predetermined plural number of times.

[Claim 58]
A transmitting apparatus as described in the Claim 57, wherein the above-mentioned selecting means will change the selection of the coding method based on 2 or more values of the transmission rates of the above-mentioned transmission line detected out by the above-mentioned detecting means plural number of times.

[Claim 59]
A transmitting apparatus as described in the Claim 58, wherein the above-mentioned selecting means will change the selection of the coding method based on an average value or a middle value between maximum and minimum values of the transmission rates of the above-mentioned transmission line detected out by the above-mentioned detecting means plural number of times.

[Claim 60]
A transmitting apparatus as described in the Claim 57, wherein the above-mentioned selecting means will change the selection of the above-mentioned coding method based on a maximum value or a minimum value of the transmission rates of the above-mentioned transmission line detected out by the above-mentioned detecting means plural number of times.

[Claim 61]
A transmitting apparatus as described in the Claim 46, wherein the adding means for adding, to the coded data obtained with the coding method selected by the above-mentioned selecting means, the above-mentioned coding method information indicating the above-mentioned coding method selected will be further equipped.

[Claim 62]
A transmitting method for use in a transmitting apparatus for transmitting the coded data resulted from encoding a digital signal via a predetermined transmission line, wherein:
the above-mentioned transmitting apparatus will be equipped with a plurality of coding means for respectively encoding the above-mentioned digital signal with a plurality of coding methods and outputting the above-mentioned coded data, and the above-mentioned

transmitting method will be equipped with a detecting step of detecting out a transmission rate of the above-mentioned transmission line, a selecting step of selecting one of the above-mentioned plurality of coding methods which will be possible to provide the coded data having a bit rate corresponding to the transmission rate of the above-mentioned transmission line, and a transmitting step of transmitting the above-mentioned coded data obtained with the coding method selected in the above-mentioned selecting step.

[Claim 63]
A transmitting method as described in the Claim 62, wherein the above-mentioned selecting step will select one of the above-mentioned plurality of coding means which outputs the above-mentioned coded data having a bit rate corresponding to the transmission rate of the above-mentioned transmission line, thereby causing the above-mentioned digital signal to be encoded by the selected coding means, and the above-mentioned transmitting step will transmit the coded data outputted from the above-mentioned coding means selected.

[Claim 64]
A transmitting method as described in the Claim 62, wherein the above-mentioned transmitting apparatus will be further equipped with a plurality of storing means for storing a plurality of coded data resulted from respectively encoding the above-mentioned digital signal by the above-mentioned plurality of coding means, wherein the above-mentioned selecting step will select, from among the above-mentioned plurality of coded data stored in the above-mentioned plurality of storing means, one which has a bit rate corresponding to the transmission rate of the above-mentioned transmission line.

[Claim 65]
A transmitting method as described in the Claim 62, wherein the above-mentioned detecting step will detect out the transmission rate of the above-mentioned transmission line by determining a communication time required for transferring a predetermined amount of data between the above-mentioned transmitting apparatus and the receiving apparatus for receiving the above-mentioned coded data and deriving the transmission rate based on the communication time.

[Claim 66]
A transmitting method as described in the Claim 65, wherein the above-mentioned detecting step will determine the above-mentioned communication time by measuring the same.

[Claim 67]
A transmitting method as described in the Claim 65, wherein, in the case when the data transferred between the above-mentioned transmitting apparatus and the above-mentioned receiving apparatus for receiving the above-mentioned coded data are added with the transmission time at which the above-mentioned data has been transmitted, the above-mentioned detecting step will determine the communication time based on the above-mentioned transmission time.

[Claim 68]
A transmitting method as described in the Claim 62, wherein, in the case when the above-mentioned transmitting step transmits the above-mentioned coded data while securing a predetermined transmission rate for the above-mentioned transmission line, the above-mentioned selecting step will select one of the above-mentioned plurality of coding methods which will be possible to provide the coded data having a bit rate corresponding to the above-mentioned predetermined transmission rate.

[Claim 69]
A transmitting method as described in the Claim 62, wherein at the time of start of transmission of the above-mentioned coded data, the above-mentioned selecting step will select the above-mentioned coding method capable of providing the coded data having a bit rate corresponding to the transmission rate of the above-mentioned transmission line detected out in the above-mentioned detecting step.

[Claim 70]
A transmitting method as described in the Claim 62, wherein after the start of transmission of the above-mentioned coded data, the above-mentioned selecting step will change the selection of the above-mentioned coding method based on the transmission rate of the above-mentioned transmission line detected out in the above-mentioned detecting step.

[Claim 71]
A transmitting method as described in the Claim 70, wherein the above-mentioned detecting step will detect out the transmission rate of the above-mentioned transmission line by determining a communication time required for transferring a predetermined amount of data between the above-mentioned transmitting apparatus and the receiving apparatus for receiving the above-mentioned coded data and deriving the transmission rate based on the above-mentioned communication time.

[Claim 72]
A transmitting method as described in the Claim 70, wherein the above-mentioned detecting step will detect out the transmission rate of the above-mentioned transmission line between the above-mentioned transmitting apparatus and the receiving apparatus for receiving the above-mentioned coded data, and the above-mentioned selecting step will change the selection of the above-mentioned coding method based on the transmission rate of the above-mentioned transmission line whenever the transmission rate of the above-mentioned transmission line is detected out in the above-mentioned detecting step.

[Claim 73]
A transmitting method as described in the Claim 70, wherein the above-mentioned detecting step will detect out the transmission rate of the above-mentioned transmission line between the above-mentioned transmitting apparatus and the receiving apparatus for receiving the above-mentioned coded data, and the above-mentioned selecting step will change the selection of the above-mentioned coding method based on the transmission rate of the above-

mentioned transmission line whenever the transmission rate of the above-mentioned transmission line is detected out in the above-mentioned detecting step a predetermined plural number of times.

[Claim 74]
A transmitting method as described in the Claim 73, wherein the above-mentioned selecting step will change the selection of the above-mentioned coding method based on 2 or more values of the transmission rates of the above-mentioned transmission line detected out in the above-mentioned detecting step plural number of times.

[Claim 75]
A transmitting method as described in the Claim 74, wherein the above-mentioned selecting step will change the selection of the above-mentioned coding method based on an average value or a middle value between maximum and minimum values of the transmission rates of the above-mentioned transmission line detected out in the above-mentioned detecting step plural number of times.

[Claim 76]
A transmitting method as described in the Claim 73, wherein the above-mentioned selecting step will change the selection of the above-mentioned coding method based on a maximum value or a minimum value of the transmission rates of the above-mentioned transmission line detected out in the above-mentioned detecting step plural number of times.

[Claim 77]
A transmitting method as described in the Claim 62, wherein an adding step of adding the coding method information indicating the above-mentioned coding method selected to the above-mentioned coded data obtained with the coding method selected in the above-mentioned selecting step, will be further equipped.

[Claim 78]
A providing medium for providing a computer program for rendering a computer to execute the processing to transmit the coded data resulted from encoding a digital signal via a predetermined transmission line, wherein: the above-mentioned computer will be equipped with a plurality of coding means for respectively encoding the above-mentioned digital signal with a plurality of coding methods and outputting the above-mentioned coded data, and it will provide a computer program equipped with a detecting step of detecting out a transmission rate of the above-mentioned transmission line, a selecting step of selecting one of the above-mentioned plurality of coding methods which will be possible to provide the coded data having a bit rate corresponding to the transmission rate of the above-mentioned transmission line, and a transmitting step of transmitting the above-mentioned coded data obtained with the coding method selected in the above-mentioned selecting step.

[Claim 79]
A providing medium as described in the Claim 78, wherein the above-mentioned selecting

step will select one of the above-mentioned plurality of coding means which outputs the coded data having a bit rate corresponding to the transmission rate of the above-mentioned transmission line, thereby causing the above-mentioned digital signal to be encoded by the selected coding means, and the above-mentioned transmitting step will transmit the above-mentioned coded data outputted from the above-mentioned coding means selected.

[Claim 80]
A providing medium as described in the Claim 78, wherein the above-mentioned computer further comprises a plurality of storing means for storing a plurality of coded data resulted from respectively encoding the above-mentioned digital signal by the above-mentioned plurality of coding means, wherein the above-mentioned selecting step will select, from among the above-mentioned plurality of coded data stored in the above-mentioned plurality of storing means, one which has a bit rate corresponding to the transmission rate of the above-mentioned transmission line.

[Claim 81]
A providing medium as described in the Claim 78, wherein the above-mentioned detecting step will detect out the transmission rate of the above-mentioned transmission line by determining a communication time required for transferring a predetermined amount of data between the above-mentioned computer and a receiving apparatus for receiving the above-mentioned coded data and deriving the transmission rate based on the measured communication time.

[Claim 82]
A providing medium as described in the Claim 81, wherein the above-mentioned detecting step will determine the above-mentioned communication time by measuring the same.

[Claim 83]
A providing medium as described in the Claim 81, wherein, in the case when the data transferred between the above-mentioned computer and above-mentioned receiving apparatus for receiving the above-mentioned coded data is added with the transmission time at which the above-mentioned data has been transmitted, the above-mentioned detecting step will determine the communication time based on the above-mentioned transmission time.

[Claim 84]
A providing medium as described in the Claim 78, wherein, in the case when the above-mentioned transmitting step transmits the above-mentioned coded data while securing a predetermined transmission rate for the above-mentioned transmission line, the above-mentioned selecting step will select one of the above-mentioned plurality of coding methods which will be possible to provide the coded data having a bit rate corresponding to the above-mentioned predetermined transmission rate.

[Claim 85]
A providing medium as described in the Claim 78, wherein at the time of start of transmission

of the above-mentioned coded data, the above-mentioned selecting step will select the above-mentioned coding method capable of providing the coded data having a bit rate corresponding to the transmission rate of the above-mentioned transmission line detected out in the above-mentioned detecting step.

[Claim 86]
A providing medium as described in the Claim 78, wherein after the start of transmission of the above-mentioned coded data, the above-mentioned selecting step will change the selection of the above-mentioned coding method based on the transmission rate of the above-mentioned transmission line detected out in the above-mentioned detecting step.

[Claim 87]
A providing medium as described in the Claim 86, wherein the above-mentioned detecting step will detect out the transmission rate of the above-mentioned transmission line by determining a communication time required for transferring a predetermined amount of data between the above-mentioned computer and a receiving apparatus for receiving the above-mentioned coded data and deriving the transmission rate based on that communication time.

[Claim 88]
A providing medium as described in the Claim 86, wherein the above-mentioned detecting step will detect out the transmission rate of the above-mentioned transmission line between the above-mentioned computer and a receiving apparatus for receiving the above-mentioned coded data, and the above-mentioned selecting step will change the selection of the above-mentioned coding method based on the transmission rate of the above-mentioned transmission line whenever the transmission rate of the above-mentioned transmission line is detected out in the above-mentioned detecting step.

[Claim 89]
A providing medium as described in the Claim 86, wherein the above-mentioned detecting step will detect out the transmission rate of the above-mentioned transmission line between the above-mentioned computer and a receiving apparatus for receiving the above-mentioned coded data, and the above-mentioned selecting step will change the selection of the above-mentioned coding method based on the transmission rate of the above-mentioned transmission line whenever the transmission rate of the above-mentioned transmission line is detected out in the above-mentioned detecting step a predetermined plural number of times.

[Claim 90]
A providing medium as described in the Claim 89, wherein the above-mentioned selecting step will change the selection of the above-mentioned coding method based on 2 or more values of the transmission rates of the above-mentioned transmission line detected out in the above-mentioned detecting step plural number of times.

[Claim 91]
A providing medium as described in the Claim 90, wherein the above-mentioned selecting

step will change the selection of the above-mentioned coding method based on an average value or a middle value between maximum and minimum values of the transmission rates of the above-mentioned transmission line detected out in the above-mentioned detecting step plural number of times.

[Claim 92]
A providing medium as described in the Claim 89, wherein the above-mentioned selecting step will change the selection of the above-mentioned coding method based on a maximum value or a minimum value of the transmission rates of the above-mentioned transmission line detected out in the above-mentioned detecting step plural number of times.

[Claim 93]
A providing medium as described in the Claim 78, wherein an adding step of adding the coding method information indicating the selected coding method to the coded data obtained with the coding method selected in the above-mentioned selecting step, will be further equipped.

[Claim 94]
A receiving apparatus for receiving the coded data which encoded the digital signal via a predetermined transmission line, wherein such receiving apparatus will be equipped with the receiving means for receiving the above-mentioned coded data encoded by a coding method capable of obtaining the data of a bit rate corresponding to the transmission rate of the above-mentioned transmission line, and the decoding means for decoding the above-mentioned coded data.

[Claim 95]
A receiving apparatus as described in the Claim 94, wherein, in the case when the coding method information indicating the coding method is added to the above-mentioned coded data, the recognizing means for recognizing the decoding method of the above-mentioned coded data based on the above-mentioned coding method information will be further equipped.

[Claim 96]
A receiving method for receiving the coded data which encoded the digital signal via a predetermined transmission line, wherein, such receiving method will be equipped with a receiving step of receiving the above-mentioned coded data encoded by a coding method capable of obtaining the data of a bit rate corresponding to the transmission rate of the mentioned transmission line, and a decoding step of decoding the above-mentioned coded data.

[Claim 97]
A receiving method as described in the Claim 96, wherein, in the case when the coding method information indicating the coding method is added to the above-mentioned coded data, a recognition step of recognizing the decoding method of the above-mentioned coded

data based on the above-mentioned coding method information will be further equipped.

[Claim 98]
A providing medium for providing a computer program for causing a computer to receive the coded data which encoded the digital signal via a predetermined transmission line, wherein such providing medium will provide a computer program which will be equipped with a receiving step of receiving the above-mentioned coded data encoded by a coding method capable of obtaining the data of a bit rate corresponding to the transmission rate of the mentioned transmission line, and a decoding step of decoding the above-mentioned coded data.

[Claim 99]
A providing medium as described in the Claim 98, wherein, in the case when the coding method information indicating the coding method is added to the above-mentioned coded data, the above-mentioned computer program will be further equipped with a recognition step of recognizing the decoding method of the above-mentioned coded data based on the above-mentioned coding method information.

[Technical field to which the invention belongs]
[0001]
The present invention is related to a transmitting apparatus and method, a receiving apparatus and method, and a providing medium, more particularly, the present invention is related to a transmitting apparatus and method, a receiving apparatus and method, and a providing medium which are suitably used, for example, in the case of encoding and transmitting time series digital signals such as audio signals, and receiving and decoding the digital signals to reproduce them in real time on the receiving side.

[0002]
[Conventional technology]
For example, in the case when digital signals such as digital audio signals are transmitted from the transmitting side to the receiving side via a network, e.g., Internet, it is customary that the digital signals are transmitted after being compressed and encoded into coded data on the transmitting side, and the coded data is decoded on the receiving side, because the data rate of the digital signals is higher than the transmission band (i.e., the transmission rate) of the network. In addition, in such case of transmitting and receiving such a digital signal, the premise is that the receiving side includes a decoder corresponding to an encoder provided on the transmitting side.

[0003]
[Problems to be solved by the invention]
Coded data resulted from encoding made by an encoder on the transmitting side is transmitted to the receiving side via a network as mentioned above, but the transmission rate of the coded data in the network generally varies due to the amount of traffic, etc. Therefore, apart from the case where the coded data is all downloaded and then decoded on the receiving side, it may occur in the case of decoding the coded data while receiving the same that the transmission of the coded data becomes too late to decode and reproduce the audio signals in real time if the transmission rate of the network lowers below the data rate of the coded data.

[0004]
In addition, although a system of Internet or any other network is designed so as to avoid the transmission of the coded data from becoming too late as far as possible, it is nevertheless sometimes difficult to decode and reproduce audio signals in real time due to, e.g., the ability of hardware and the decoding method of a decoder on the receiving side.

[0005]
In other words, for example, when the coding method of an encoder on the transmitting side is complex, the decoding method of a decoder for decoding the coded data, which has been encoded by the encoder, is also usually complex. In such a case, if hardware on the receiving side has not a processing ability capable of coping with the complex decoding method, decoding of audio signals would be too late for the start of reproduction thereof. In addition, the processing time required for the decoder to decode the coded data is greatly affected by

the processing ability of hardware on the receiving side, accordingly, if the processing ability of hardware on the receiving side is lower than expected by the transmitting side, the time taken for decoding the coded data would be longer than expected by the transmitting side, thus resulting in a difficulty in decoding and reproducing the audio signals in real time.

[0006]
The present invention has been made in view of the state of art set forth above and intends to decode and reproduce digital signals in real time.

[0007]
[Means for the purpose of solving the problems]
A transmitting apparatus as described in the Claim 1 has the characteristics that it will be equipped with: a plurality of coding means for respectively encoding the digital signal with a plurality of coding methods and outputting the coded data, the instructing means for instructing the coding method for the purpose of encoding a part or all of the digital signal from a plurality of coding methods, the selecting means for selecting the coded data according to the coding method instructed by the instructing means, and the adding means for adding the coding method information indicating the coding method for the coded data to the coded data selected by the selecting means,

[0008]
A transmitting method as described in the Claim 12 has the characteristics that it will be equipped with the instructing step for instructing the coding method for the purpose of encoding a part or all of the digital signal from a plurality of coding methods, the selecting step for selecting the coded data according to the coding method instructed by the instructing step, and the adding step for adding the coding method information indicating the coding method for the coded data to the coded data selected by the selecting step, will be equipped.

[0009]
A providing medium as described in the Claim 22 has the characteristics that it will provide a computer program equipped with the instructing step for instructing the coding method for the purpose of encoding a part or all of the digital signal from a plurality of coding methods, the selecting step for selecting the coded data according to the coding method instructed by the instructing step, and the adding step for adding the coding method information indicating the coding method for the coded data to the coded data selected by the selecting step, will be provided.

[0010]
A receiving apparatus as described in the Claim 32 has the characteristics that it will be equipped with the extracting means for extracting the coding method information indicating the coding method used to obtain that coded data added to the coded data, the recognizing means for recognizing the decoding method for decoding the coded data based on the coding method information, and the decoding means for decoding the coded data according to the decoding method recognized by the recognition means.

[0011]
A receiving method as described in the Claim 37 has the characteristics that it will be equipped with the extracting step for extracting the coding method information indicating the coding method used to obtain that coded data added to the coded data, the recognizing step for recognizing the decoding method for decoding the coded data based on the coding method information, and the decoding step for decoding the coded data according to the decoding method recognized by the recognition step.

[0012]
A providing medium as described in the Claim 41 has the characteristics that it will provide a computer program equipped with the extracting step for extracting the coding method information indicating the coding method used to obtain that coded data added to the coded data, the recognizing step for recognizing the decoding method for decoding the coded data based on the coding method information, and the decoding step for decoding the coded data according to the decoding method recognized by the recognition means.

[0013]
A providing medium as described in the Claim 45 has the characteristics that the coding method for encoding a part or all of the digital signal will be instructed from a plurality of coding methods, the coded data which coded the digital signal will be selected by the instructed coding method, the coded data and the coding method information obtained by adding the coding method information indicating the coding method for that coded data to the coded data selected will be provided.

[0014]
A transmitting apparatus as described in the Claim 46 has the characteristics that it will be equipped with a plurality of coding means for respectively encoding the digital signal with a plurality of coding methods and outputting the coded data, the detecting means for detecting out a transmission rate of the transmission line, the selecting means for selecting one of a plurality of coding methods which will be possible to provide the coded data having a bit rate corresponding to the transmission rate of the transmission line, and the transmitting means for transmitting the coded data obtained with the coding method selected by the selecting means.

[0015]
A transmitting method as described in the Claim 62 has the characteristics that it will be equipped with a detecting step of detecting out a transmission rate of the transmission line, a selecting step of selecting one of a plurality of coding methods which will be possible to provide the coded data having a bit rate corresponding to the transmission rate of the transmission line, and a transmitting step of transmitting the coded data obtained with the coding method selected in the selecting step.

[0016]
A providing medium as described in the Claim 78 has the characteristics that it will provide a

computer program equipped with a detecting step of detecting out a transmission rate of the transmission line, a selecting step of selecting one of a plurality of coding methods which will be possible to provide the coded data having a bit rate corresponding to the transmission rate of the transmission line, and a transmitting step of transmitting the coded data obtained with the coding method selected in the selecting step.

[0017]
A receiving apparatus as described in the Claim 94 has the characteristics that it will be equipped with the receiving means for receiving the coded data encoded by a coding method capable of obtaining the data of a bit rate corresponding to the transmission rate of the transmission line, and the decoding means for decoding the coded data.

[0018]
A receiving method as described in the Claim 96 has the characteristics that it will be equipped with a receiving step of receiving the coded data encoded by a coding method capable of obtaining the data of a bit rate corresponding to the transmission rate of the mentioned transmission line, and a decoding step of decoding the coded data.

[0019]
A providing medium as described in the Claim 98 has the characteristics that it will provide a computer program which will be equipped with a receiving step of receiving the coded data encoded by a coding method capable of obtaining the data of a bit rate corresponding to the transmission rate of the mentioned transmission line, and a decoding step of decoding the coded data.

[0020]
In a transmitting apparatus as described in the Claim 1, it has been made in a manner that a plurality of coding means will respectively encode the digital signal with a plurality of coding methods and output the coded data, and the instructing means will instruct the coding method for the purpose of encoding a part or all of the digital signal from a plurality of coding methods. It has been made in a manner that the selecting means will select the coded data according to the coding method instructed by the instructing means, and the adding means will add the coding method information indicating the coding method for the coded data to the coded data selected by the selecting means,

[0021]
In a transmitting method as described in the Claim 12, it has been made in a manner that the coding method for the purpose of encoding a part or all of the digital signal will be instructed from a plurality of coding methods, the coded data will be selected according to that coding method, and the coding method information indicating the coding method for the coded data will be added to the coded data selected.

[0022]
In a providing medium as described in the Claim 22, it has been made in a manner that a

computer program will be provided for the purpose of carrying out the processing by instructing the coding method for the purpose of encoding a part or all of the digital signal from a plurality of coding methods, selecting the coded data according to that coding method, and adding the coding method information indicating the coding method for the coded data to the coded data selected.

[0023]
In a receiving apparatus as described in the Claim 32, it has been made in a manner that the extracting means will extract the coding method information indicating the coding method used to obtain that coded data added to the coded data, and the recognizing means will recognize the decoding method for decoding the coded data based on the coding method information. And, it has been made in a manner that the decoding means will decode the coded data according to the decoding method recognized by the recognition means.

[0024]
In a receiving method as described in the Claim 37, it has been made in a manner that the coding method information indicating the coding method used to obtain that coded data added to the coded data will be extracted, the decoding method for decoding the coded data will be recognized based on that coding method information, and the coded data will be decoded according to the decoding method recognized.

[0025]
In a providing medium as described in the Claim 41, it has been made in a manner that it will provide a computer program for the purpose of carrying out the processing by extracting the coding method information indicating the coding method used to obtain that coded data added to the coded data, recognizing the decoding method for decoding the coded data based on that coding method information, and decoding the coded data according to the decoding method recognized.

[0026]
In a providing medium as described in the Claim 45, it has been made in a manner that the coding method for encoding a part or all of the digital signal will be instructed from a plurality of coding methods, the coded data which coded the digital signal will be selected by the instructed coding method, the coded data and the coding method information obtained by adding the coding method information indicating the coding method for that coded data to the coded data selected will be provided.

[0027]
In a transmitting apparatus as described in the Claim 46, it has been made in a manner that a plurality of coding means will respectively encode the digital signal with a plurality of coding methods and output the coded data, and the detecting means will detect out a transmission rate of the transmission line. And, it has been made in a manner that the selecting means will select one of a plurality of coding methods which will be possible to provide the coded data having a bit rate corresponding to the transmission rate of the

transmission line, and the transmitting means will transmit the coded data obtained with the coding method selected by the selecting means.

[0028]
In a transmitting method as described in the Claim 62, it has been made in a manner that a transmission rate of the transmission line will be detected out, one of a plurality of coding methods which will be possible to provide the coded data having a bit rate corresponding to the transmission rate of the transmission line will be selected, and the coded data obtained with the coding method selected will be transmitted.

[0029]
In a providing medium as described in the Claim 78, it has been made in a manner that it will provide a computer program for the purpose of carrying out the processing by detecting out a transmission rate of the transmission line, selecting one of a plurality of coding methods which will be possible to provide the coded data having a bit rate corresponding to the transmission rate of the transmission line, and transmitting the coded data obtained with the coding method selected.

[0030]
In a receiving apparatus as described in the Claim 94, it has been made in a manner that the receiving means will receive the coded data encoded by a coding method capable of obtaining the data of a bit rate corresponding to the transmission rate of the transmission line, and the decoding means will decode the coded data.

[0031]
In a receiving method as described in the Claim 96, it has been made in a manner that the coded data encoded by a coding method capable of obtaining the data of a bit rate corresponding to the transmission rate of the mentioned transmission line will be received, and that coded data will be decoded.

[0032]
In a providing medium as described in the Claim 98, it has been made in a manner that it will provide a computer program for the purpose of carrying out the processing by receiving the coded data encoded by a coding method capable of obtaining the data of a bit rate corresponding to the transmission rate of the mentioned transmission line and decoding the coded data.

[0033]
[Embodiments for the implementation of the invention]
In the following, the embodiments for the implementation of the invention will be explained, but, before doing so, in order to clarify the correspondence relationship between each means of the invention described in the scope of patent claims and the following embodiments, when the features of the present invention are described by adding a corresponding embodiment (however, it is an example) in parentheses after each means, it will be as below.

[0034]
That is to say, a transmitting apparatus for outputting the coded data resulted from encoding the time series digital signal as described in the Claim 1, has the characteristics that it will be equipped with: a plurality of coding means (for example, the encoders 53_1 to 53_N as shown in the FIG. 5, or the like) for respectively encoding the digital signal with a plurality of coding methods and outputting the coded data, the instructing means (for example, the selection instructing unit 55 as shown in the FIG. 5, or the like) for instructing the coding method for the purpose of encoding a part or all of the digital signal from a plurality of coding methods, the selecting means (for example, the switch 52 and the encoding selecting circuit 56 as shown in the FIG. 5, or the like) for selecting the coded data according to the coding method instructed by the instructing means, the adding means (for example, the header inserting circuit 54 as shown in the FIG. 5, or the like) for adding the coding method information indicating the coding method for the coded data to the coded data selected by the selecting means, and the outputting means (for example, the transmitting circuit 33 as shown in the FIG. 4, or the like) for outputting the coded data to which the coding method information is added.

[0035]
A transmitting apparatus as described in the Claim 6, has the characteristics that in the case if the receiving apparatus which receives the coded data functions as a decoding apparatus for decoding the coded data by executing a computer program, at the time when the receiving apparatus does not have a computer program for the purpose of functioning as a decoding apparatus for decoding the coded data outputted by the outputting means, the transmitting means (for example, the processing step S7 of the program as shown in the FIG. 9, or the like) for transmitting the computer program to the receiving apparatus will be further equipped.

[0036]
A transmitting apparatus as described in the Claim 7, has the characteristics that in the case if the receiving apparatus which receives the coded data functions as a decoding apparatus which decodes the coded data by executing the computer program, at the time when the receiving apparatus does not have a computer program for the purpose of functioning as a decoding apparatus for decoding the coded data outputted by the outputting means, the changing means (for example, the processing step S9 of the program as shown in the FIG. 9, or the like) for changing the coded data outputted by the outputting means to the data coded by a coding method which can be decoded by the receiving apparatus will be further equipped.

[0037]
A transmitting apparatus as described in the Claim 10, has the characteristics that a plurality of storing means for storing a plurality of coded data obtained through encoding the digital signal by a plurality of coding means will be further equipped, and the selecting means (for example, the storage 91_1 to 91_N as shown in the FIG. 16, or the like) will select one of a

plurality of coded data stored in a plurality of storing means by the coding method instructed by the instructing means.

[0038]
A transmitting apparatus as described in the Claim 11, has the characteristics that a plurality of groups of a plurality of the coding means, the instructing means, the selecting means, and the adding means will be equipped; and the multiplexing means (for example, the multiplexing unit 42 as shown in the FIG. 4, or the like) for multiplexing the output of each group of the adding means will be further equipped.

[0039]
A receiving apparatus as described in the Claim 32, has the characteristics that such receiving apparatus will be equipped with the extracting means (for example, the header extracting circuit 81 as shown in the FIG. 8, or the like) for extracting the coding method information indicating the coding method used to obtain that coded data added to the coded data, the recognizing means (for example, the header extracting circuit 81 as shown in the FIG. 8, or the like) for recognizing the decoding method for decoding the coded data based on the coding method information, and the decoding means (for example, one of the decoders 83_1 to $83_{N'}$ as shown in the FIG. 8, or the like) for decoding the coded data according to the decoding method recognized by the recognition means.

[0040]
A receiving apparatus as described in the Claim 33, has the characteristics that in the case when the transmitting apparatus for transmitting the coded data instructs the coding method of the digital signal based on the processing capacity of the transmission destination, the processing capability transmitting means (for example, the processing step S12 of the program as shown in the FIG. 12, or the like) for transmitting its own processing capability to the transmitting apparatus will be further equipped.

[0041]
A receiving apparatus as described in the Claim 34, has the characteristics that the request transmitting means (for example, the processing step S18 of the program as shown in the FIG. 12, or the like) for transmitting the request of the coding method used for coding the digital signal to the transmitting apparatus which transmits the coded data will be further equipped.

[0042]
A receiving apparatus as described in the Claim 35, has the characteristics that in the case when the information processing apparatus functions as the decoding means by executing a computer program, at the time when it does not have a computer program for the purpose of functioning as the decoding means corresponding to the decoding method which decodes the coded data, a receiving means (for example, the processing step S16 of the program as shown in the FIG. 12, or the like) for receiving a computer program for the purpose of functioning as the decoding means corresponding to a decoding method for decoding the coded data

transmitted by the transmitting apparatus which transmits the coded data, and the incorporating means (for example, the processing step S16 of the program as shown in the FIG. 12, or the like) for incorporating the computer program received by the receiving means into the information processing apparatus will be further equipped.

[0043]
A receiving apparatus as described in the Claim 36, has the characteristics that in the case when a plurality of the coded data is multiplexed, a plurality of groups of the extracting means, recognizing means, and decoding means will be equipped, and the separating means (for example, the separating unit 71 as shown in the FIG. 7, or the like) for separating and supplying a plurality of the multiplexed data to each group of the extracting means will be equipped.

[0044]
A transmitting apparatus as described in the Claim 46, has the characteristics that such transmitting apparatus will be equipped with a plurality of coding means (for example, the encoders 53_1 to 53_N as shown in the FIG. 5, or the like) for respectively encoding the digital signal with a plurality of coding methods and outputting the coded data, the detecting means (for example, the selection instructing unit 55 as shown in the FIG. 5, or the like) for detecting out a transmission rate of the transmission line, the selecting means (for example, the encoding selector 56 as shown in the FIG. 5, or the like) for selecting one of a plurality of coding methods which will be possible to provide the coded data having a bit rate corresponding to the transmission rate of the transmission line, and the transmitting means (for example, the transmitting circuit 33 as shown in the FIG. 4, or the like) for transmitting the coded data obtained with the coding method selected by the selecting means.

[0045]
A transmitting apparatus as described in the Claim 48, has the characteristics that a plurality of storing means (for example, the storage 91_1 to 91_N as shown in the FIG. 16, or the like) for storing a plurality of coded data resulted from respectively encoding the digital signal by a plurality of coding means will be equipped, the selecting means will select, from among a plurality of coded data stored in a plurality of storing means, one which has a bit rate corresponding to the transmission rate of the transmission line.

[0046]
A transmitting apparatus as described in the Claim 61, has the characteristics that the adding means (for example, the header inserting circuit 54 as shown in the FIG. 5, or the like) for adding, to the coded data obtained with the coding method selected by the selecting means, the coding method information indicating the coding method selected will be further equipped.

[0047]
A receiving apparatus as described in the Claim 94, has the characteristics that such receiving apparatus will be equipped with the receiving means (for example, the receiving circuit 61 as

shown in the FIG. 7, or the like) for receiving the coded data encoded by a coding method capable of obtaining the data of a bit rate corresponding to the transmission rate of the transmission line, and the decoding means (for example, the decoders 83_1 to $83_{N'}$ as shown in the FIG. 8, or the like) for decoding the coded data.

[0048]
A receiving apparatus as described in the Claim 95, has the characteristics that, in the case when the coding method information indicating the coding method is added to the coded data, the recognizing means (for example, the header extracting circuit 81 as shown in the FIG. 8, or the like) for recognizing the decoding method of the coded data based on the coding method information will be further equipped.

[0049]
In addition, it goes without saying that this description does not mean that each means is limited to those described above.

[0050]
FIG. 1 shows an exemplified construction of one embodiment of a transmission system (the term “system” means a plurality of devices assembled together in a logical correlation no matter whether the devices having their own constructions are all positioned in the same housing or not) to which the present invention is applied.

[0051]
In this transmission system, when a request for time series digital signals, e.g., digital audio signals, is issued from a client terminal 3 to a server 1 via a network 2 such as Internet, ISDN (Integrated Service Digital Network) or PSTN (Public Switched Telephone Network), the server 1 encodes the requested audio signals with a predetermined coding method, and resulting coded data is transmitted to the client terminal 3 via the network 2. After receiving the coded data from the server 1, the client terminal 3 decodes the coded data and reproduces the original audio signals in real time, for example, (so-called streaming reproduction).

[0052]
FIG. 2 shows an exemplified construction of hardware of the server 1 in the FIG. 1.

[0053]
A ROM (Read Only Memory) 11 stores, for example, an IPL (Initial Program Loading) program and so on. A CPU (Central Processing Unit) 12 executes an OS (Operating System), which is stored (recorded) in an external storage 16, in accordance with the IPL program stored in the ROM 11, and also executes various application programs, which are stored in the external storage 16, under control of the OS, thereby carrying out a coding process of audio signals, a transmitting process of coded data resulted from the coding process to the client terminal 3, or the like. A RAM (Random Access Memory) 13 stores programs, data and so on which are necessary for operation of the CPU 12. An input device 14 is constructed of, e.g., a keyboard, a mouse, a microphone or an external interface, and is operated when

necessary data or command is inputted. Furthermore, the input device 14 is also constructed to function as an interface for accepting input of digital audio signals externally applied to the client terminal 3. An output device 15 is constructed of, e.g., a display, a speaker or a printer, and displays or outputs necessary information. The external storage 16 comprises a hard disk, for example, and stores the OS and the application programs mentioned above. Program modules provided to the client terminal 3 and serving as decoders, described above, are also stored in the external storage 16. In addition, the external storage 16 stores other data including data necessary for operation of the CPU 22, or the like. A communicating device 17 carries out control required for communication via the network 2.

[0054]
FIG. 3 shows an exemplified construction of hardware of the client terminal 3 in the FIG. 1.

[0055]
The client terminal 3 is made up of a ROM 21 to a communicating device 27 and has a construction basically similarly to that of the server 1 made up of the ROM 11 to the communicating device 17.

[0056]
However, unlike the server 1, an external storage 26 stores, as application programs, a program for decoding the coded data transmitted from the server 1, programs for executing later-described processing, and so on; a CPU 22 executes those application programs to, for example, perform a decoding process of the coded data.

[0057]
FIG. 4 shows an exemplified functional construction of the server 1 in the FIG. 2.
In addition, the illustrated construction is basically realized upon the CPU 12 executing the application programs stored in the external storage 16.

[0058]
Audio signals to be provided to the client terminal 3 are supplied to an audio signal input circuit 31. In the audio signal input circuit 31, analog audio signals are A/D-converted into digital audio signals. Then, the audio signal input circuit 31 separates the digital audio signals for each of channels, for example, and supplies them to a coding circuit 32.

[0059]
That is to say, audio signals of a piece of music, for example, are separated for each of respective parts of guitar, piano, drum, song (lyrics), or the like that constitute the piece of music together and are inputted to the audio signal input circuit 31 in a synchronous relation; the audio signal input circuit 31 outputs the audio signals of individual parts respectively as the audio signals of individual channels.

[0060]
Moreover, audio signals of 2 or more parts may be inputted to the audio signal input

circuit 31 in a mixed condition. However, in this case, the audio signal input circuit 31 outputs the audio signals in the mixed condition.

[0061]
In addition, audio signals inputted to the audio signal input circuit 31 may be in the form of, e.g., MIDI (Musical Instrument Digital Interface) data (i.e., data for controlling a MIDI sound source) rather than the actual audio signals.

[0062]
The coding circuit 32 encodes the audio signals from the audio signal input circuit 31at high efficiency.

[0063]
That is to say, in the embodiment shown in the FIG. 4, the coding circuit 32 comprises a number M of coding units 41_1 to 41_M and a multiplexing unit 42. The coding unit 41_m (m = 1, 2, . . . M) is supplied with the audio signal of each corresponding channel from the audio signal input circuit 31. The coding unit 41m encodes the audio signal from the audio signal input circuit 31, and supplies resulting coded data to the multiplexing unit 42. The multiplexing unit 42 multiplexes a number M of coded data outputted from the coding units 41_1 to 41_M respectively into one line, and supplies them as multiplexed data to a transmitting circuit 33.

[0064]
The transmitting circuit 33 converts the multiplexed data into a format corresponding to the communication protocol adapted for transmitting it via the network 2 and transmits the resulting data to the client terminal 3 via the network 2.

[0065]
FIG. 5 shows an exemplified construction of the coding unit 41_m in the FIG. 4.

[0066]
A frame cutting circuit 51 cuts the audio signal (audio data) from the audio signal input circuit 31 in units of frame having a predetermined length (e.g., a length suitable for coding made by encoders 53_1 to 53_N, or a length suitable for packet (network packet) transmission via the network 2), and then supplies resulting frames to a switch 52. The switch 52 will select one of the encoders 53_1 to 53_N under control of an encoding selecting circuit 56; accordingly, each frame outputted from the frame cutting circuit 51 is supplied to one of the encoders 53_1 to 53_N through the switch 52.

[0067]
The encoders 53_1 to 53_N (N is two or more) are constructed to encode the audio signal with different coding methods from each other (for example, linear PCM (Pulse Code Modulation), ADPCM (Adaptive Differential PCM), layers 1, 2, 3 of MPEG (Moving Picture Experts Group), ATRAC (Adaptive Transform Acoustic Coding), ATRAC 2, and HVXC

(Harmonic Vector Excitation Coding)). Stated otherwise, in the embodiment, the encoders 53_1 to 53_N are prepared by using encoders which perform encoding of the audio signal with various coding methods, including a method which provides a relatively large (high) bit rate of the resulting coded data, but can reproduce an audio signal with relatively good reproducibility, a method which can provides a relatively small (low) bit rate of the resulting coded data, but reproduces an audio signal with relatively poor reproducibility, a method which requires a larger amount of computation for decoding (such a method usually also requires a larger amount of computation for coding), a method which requires a not so large amount of computation for decoding, and a method particularly suitable for coding a voice (human voice).

[0068]
Here, one example of the coding method, which provides a relatively many bit rate of the resulting coded data, is the linear PCM (the coded data resulted with this coding method is the same as that obtained by outputting a digital audio signal after A/D conversion as it is). Furthermore, example of the coding method, which provides a relatively less bit rate of the resulting coded data (i.e., which provides a high compression rate), are MPEG layer 3 and ATRAC 2. One example of the coding method, which requires a not so large amount of computation for decoding, is ATRAC. In addition, examples of the coding method suitable for a voice are HVXC and a method utilizing a linear estimation factor. Moreover, HVXC is one of the methods previously proposed by the assignee of this application, and is disclosed in detail in, e.g., Japanese Unexamined Patent Publication No. H 9 (1997) - 127989 (corresponding to U.S. Pat. No. 5,848,387).

[0069]
In addition, here, it is here assumed that even in the case of the encoders all employing, e.g., ATRAC 2only, if bit rates are different from each other, this means the use of "different coding methods". Therefore, here, for example, all the encoders 53_1 to 53_N perform encoding with ATRAC 2, while data rates of coded data outputted from the encoders are 64 Kbps, 32 Kbps, 24 Kbps, . . ., respectively.

[0070]
A selection instructing unit 55 decides appropriate one from a plurality of coding methods corresponding to the encoders 53_1 to 53_N, as described later, and then instructs the encoding selecting circuit 56 to select the decided coding method. In response to the instruction, the encoding selecting circuit 56 controls the switch 52so as to select the encoder which performs encoding with the instructed coding method. Accordingly, the frame outputted from the frame cutting circuit 51 is supplied to selected one of the encoders 53_1 to 53_N (referred to as the selected encoder hereinafter) through the switch 52.

[0071]
In the selected one of the encoders 53_1 to 53_N, the frame supplied thereto is encoded with the predetermined coding method (referred to as the selected coding method hereinafter because it is executed in the selected encoder). Coded data resulted from encoding made in the

selected encoder is supplied to the header inserting circuit 54 where an ID (Identification) (coding method information) representing the selected coding method is added to the coded data.

[0072]
That is to say, in the illustrated embodiment, the audio signal is encoded with one of a number N of coding methods. In addition, as described later, the switch 52 may be changed over midway a sequence of continued encoding of the audio signal. In this case, one portion of the audio signal is encoded with one coding method and the other part of the audio signal is encoded with another coding method. Taking into account such a case, the header inserting circuit 54 adds, to the coded data of each frame, an ID indicating the coding method selected to encode the frame, i.e., information indicating with which one of the coding methods each frame of the audio signal has been encoded.

[0073]
For example, the ID can be given by assigning unique numerals to the encoders 53_1 to 53_N, respectively, and expressing the numerals in corresponding byte strings. It is to be noted that the type of ID employed requires to be decided (agreed for a consensus) in advance between both sides of the server 1 and the client terminal 3.

[0074]
The coded data added with the ID in the header inserting circuit 54 is supplied to the multiplexing unit 42 (FIG. 4). In addition, in the header inserting circuit 54, the ID may be added to only the frame immediately after change of the coding method, for example, instead of being added in units of frame.

[0075]
FIG. 6 shows a format of data outputted from the header inserting circuit 54.

[0076]
As shown in the FIG. 6, the coded data is outputted from the encoder 53_m in such a state that an ID_m as the ID indicating the coding method executed in the encoder 53_m is inserted in, e.g., a header in the header inserting circuit 54.

[0077]
FIG. 7 shows an exemplified functional construction of the client terminal 3 in the FIG. 3. In addition, the illustrated construction is basically realized upon the CPU 22 executing the application programs stored in the external storage 26.

[0078]
The coded bit stream (multiplexed data) transmitted from the server 1 via the network 2 is supplied to a receiving circuit 61. After receiving the coded bit stream, the receiving circuit 61 performs format conversion on the received bit stream corresponding to the format conversion made in the transmitting circuit 33 in the FIG. 4, and then supplies resulting data

to a decoding circuit 62 for decoding thereof.

[0079]
The decoding circuit 62 comprises a separating unit 71 and a number M of decoding units 72_1 to 72_M. In addition, here, while the number of decoding units 72_1 to 72_M constituting the decoding circuit 62 is set here to be the same as the number of coding units 41_1 to 41_M constituting the coding circuit 32 in the FIG. 4, it is not always needed that both the numbers are identical to each other. However, in the case if the number of decoding units is less than the number of coding units, the audio signal of some one or more channels (parts) is neither decoded nor reproduced in the client terminal 3.

[0080]
The multiplexed data outputted from the receiving circuit 61 is supplied to the separating unit 71. The separating unit 71 separates the multiplexed data into the coded data of respective channels. The coded data of respective channels are each supplied to corresponding one of the decoding units 72_1 to 72_M.

[0081]
The decoding unit 72_m decodes the coded data from the separating unit 71 into the original digital audio signal which is supplied to an audio signal output circuit 63.
The audio signal output circuit 63 performs D/A-conversion of the audio signals supplied respectively from the decoding units 72_1 to 72_M, and outputs resulting audio signals after mixing if required. The audio signals outputted from the audio signal output circuit 63 are then outputted from, e.g., a speaker constituting the output device 25 (FIG. 3).

[0082]
FIG. 8 shows an exemplified construction of the decoding unit 72_m in the FIG. 7.

[0083]
The coded data from the separating unit 71 is supplied to a header extracting circuit 81.
The header extracting circuit 81 extracts the ID added to the coded data, and recognizes the decoding method for the coded data based on the extracted ID. That is to say, the ID represents the coding method executed on the coded data as mentioned above, and the decoding method for the coded data can be known if the coding method is identified.
Thus, based on the ID added to the coded data, the decoding method for the coded data is recognized in the header extracting circuit 81. Furthermore, based on the recognized result of the decoding method, the header extracting circuit 81 controls a switch 82 to select one of decoders 83_1 to $83_{N'}$. Then, the header extracting circuit 81 then supplies the coded data, deprived of the associated ID, to one of the decoders 83_1 to $83_{N'}$ (referred to as a selected decoder hereinafter) selected by the switch 82.

[0084]
The decoders 83_1 to $83_{N'}$ (N′ is 1 or more) are constructed to decode the coded data with different decoding methods from each other (basically with decoding methods corresponding

to the coding methods executed in the encoders 53_1 to $53_N$of the server 1, respectively); the selected decoder decodes the coded data, which is supplied to it from the header extracting circuit 81 through the switch 82, into the original audio signal. This decoded audio signal is supplied to the audio signal output circuit 63 (FIG. 7).

[0085]
Next, the transmitting process executed by the server 1 will be described with reference to a flow chart of the FIG. 9.

[0086]
When a connection request for receiving supply of audio signals via the network 2 is transmitted to the server 1 from the client terminal 3, the server 1 receives the connection request and executes the transmitting process in accordance with the flow chart of the FIG. 9.

[0087]
That is to say, the CPU 12 of the server 1 first executes a connecting process necessary for communication between the server 1 and the client terminal 3 in the step S1, a communication link between the server 1 and the client terminal 3 is thereby established. In addition, the server 1 is constructed so as to confirm, for example, whether the number of client terminals connected to the network at present is within a processing ability of the server 1 itself, or whether a large load possibly impeding stable communication is not applied, and to establish a communication link between the server 1 and the client terminal 3 if the client terminal 3 is in a condition capable of executing the processing without problems, or to reject the connection between the server 1 and the client terminal 3 if not so.

[0088]
Thereafter, in the step S2, the CPU 12 determines the processing ability of the client terminal 3 for which the communication link has been established. Here, the processing ability of the client terminal 3 is determined, by way of example, as shown in the FIG. 10.

[0089]
That is to say, in one example shown in the FIG. 10 (A), the client terminal 3 is constructed to transmit system information, such as the ability of the CPU 22 (including the CPU name and a clock), the memory capacity (the capacity of the RAM 23), the OS, and the remaining capacity of a hard disk (the remaining capacity of the external storage 26), after the establishment of the communication link. Based on the system information transmitted from the client terminal 3 on a voluntary base, the CPU 12 determines the processing ability of the client terminal 3.

[0090]
In addition, in another example shown in the FIG. 10 (B), after the establishment of the communication link between the server 1 and the client terminal 3, the CPU 12 controls the communicating device 17 to transmit a system information request for requesting

transmission of system information of the client terminal 3 to the client terminal 3 via the network 2. The communicating device receives this system information request 27 of the client terminal 3 and is supplied to the CPU 22. Upon receiving the system information request, the CPU 22 controls the communicating device 27 such that the system information of the client terminal 3 is transmitted to the server 1 via the network 2, as shown in the FIG. 10 (B). In the server 1, the system information thus transmitted thereto is received by the communicating device 17 and then supplied to the CPU 12. The CPU 12 recognizes the processing ability of the client terminal 3based on the received system information.

[0091]
Furthermore, in still another example shown in the FIG. 10 (C), after the establishment of the communication link between the server 1 and the client terminal 3, the CPU 12 controls the communicating device 17 to transmit, as dummy data, the coded data of 1 frame, for example, which has been encoded by any one of the encoders 53_1 to 53_N, to the client terminal 3. In addition, the dummy data can be prepared by using, e.g., a part of audio signals requested from the client terminal 3 at the time of requesting a connection request. Moreover, the coded data for use as the dummy data may be prepared beforehand for the specific purpose of recognizing the processing ability of the client terminal 3.

[0092]
The dummy data transmitted from the server 1 is received by the client terminal 3 and is decoded by one of the decoders 83_1 to $83_{N'}$ of the decoding unit 72_m. That is to say, the dummy data is also added with an ID; in the decoding unit 72_m shown in the FIG. 8, the ID added to the dummy data is extracted in the header extracting circuit 81 and the decoding method for the dummy data is recognized based on the extracted ID. The header extracting circuit 81 controls the switch 82 to select the decoder for decoding the dummy data with the recognized decoding method, whereupon the dummy data is supplied to selected one of the decoders 83_1 to $83_{N'}$ for decoding therein.

[0093]
The CPU 22 of the client terminal 3 measures a decoding time required for the selected decoder to decode the dummy data, and then transmits the measured decoding time to the server 1, as shown in the FIG. 10 (C). The CPU 12 of the server 1 recognizes the processing ability of the client terminal 3 based on the decoding time.

[0094]
After recognizing the processing ability of the client terminal 3, the CPU 12 determines whether or not the processing ability of the client terminal 3 is sufficient to decode and reproduce audio signals in real time. That is to say, in the case when the processing ability of the client terminal 3 is recognized as described with reference to the FIG. 10 (A) and the FIG. 10 (B), a resource table describing system resources necessary for decoding in real time respective coded data that have been encoded by the encoders 53_1 to 53_N is stored in the external storage 16, for example; by referring to the resource table, the CPU 12 determines whether or not the processing ability of the client terminal 3 is sufficient to decode and

reproduce in real time the coded data that is resulted from encoding audio signals with the predetermined coding method.

[0095]
In addition, in the case when the processing ability of the client terminal 3 is recognized as described with reference to the FIG. 10 (C), the CPU 12 determines whether or not the processing ability of the client terminal 3 is sufficient to decode and reproduce the coded data in real time, based on whether or not the decoding time of the coded data in the client terminal 3 is shorter than a time required for reproducing audio signals by decoding of the coded data. That is to say, in the case if the decoding time is shorter than the reproducing time, the processing ability of the client terminal 3 is determined to be sufficient. in the case if it is not so, the processing ability of the client terminal 3 is determined to be not sufficient.

[0096]
Here, in the case of recognizing the processing ability of the client terminal 3 by the method described with reference to the FIG. 10 (C), it is needed to employ the dummy data that can be decoded by any one of the decoders 83_1 to $83_{N'}$ installed in the client terminal 3.
In addition, as to what kind of coded data can be decoded in the client terminal 3, it is possible to make the server 1 recognize it, for example, by transmitting an ID corresponding to the usable decoding method from the client terminal 3 to the server 1 in accordance with a predetermined method. Alternatively, the server 1 may transmit respective dummy data encoded by the encoders 53_1 to 53_N in succession, and the client terminal 3 may decode only those of the dummy data transmitted from the server 1which can be decoded, and then return the decoding time of each decoding process to the server 1.

[0097]
In addition, in the case when it is according to the method shown in the FIG. 10 (C), the amount of processing to be made for decoding may change depending on the contents of the dummy data (e.g., depending on how the magnitude of original audio signals varies) in some decoders (selected decoders) used for decoding the dummy data; at such time, the type of data that requires a maximum or minimum amount of processing, for example, can be used as the dummy data.

[0098]
Furthermore, while in the method shown in the FIG. 10 (C) the decoding time is transmitted from the client terminal 3 to the server 1 and whether or not the processing ability of the client terminal 3 is sufficient is determined in the server 1 based on the transmitted decoding

time, such determination may be made in the client terminal 3 based on the decoding time, system resources thereof, etc., and a result of the determination may be transmitted to the server 1.

[0099]
In addition, in the case when it is according to the method shown in the FIG. 10 (C), since the dummy data is actually decoded in the client terminal 3, there is an advantage that in the case when a part of system resources is employed for any other process, effective power (resources) which are actually available to decode and reproduce the coded data except the occupied part can be recognized.

[0100]
Returning to the FIG. 9, after recognizing the processing ability of the client terminal 3, the CPU 12 of the server 1 goes to step S3 to set an encoding schedule with which the coded data can be decoded and reproduced in real time within the processing ability of the client terminal 3. That is to say, the CPU 12 functioning as the selection instructing unit 55 decides which one of the coding methods executed in the encoders 53_1 to 53_N is used to decode the audio signals requested by the client terminal 3.

[0101]
Concretely, one of the coding methods, which is adaptable for a decoding method requiring greater power within the processing ability of the client terminal 3 and outputs the coded data at a higher data rate within the range not exceeding the transmission rate of the network 2, is set as the decoding method to decode the audio signal. In this case, by so selecting the decoding method, the audio signal can be reproduced in the client terminal 3 with good sound quality.

[0102]
In addition, in the case when several coding methods are available, the coding method to be executed is set depending on the audio signals requested from the client terminal 3.
That is to say, in the case when such several coding methods include one suitable for a voice (e.g., HVXC and a method utilizing a linear estimation factor) and another suitable for instrument sounds (e.g., ATRAC), for example, when the audio signal requested from the client terminal 3 has one portion in which a level of the voice is relatively high and the other portion in which a level of the instrument sounds is relatively high, the coding method suitable for the voice is selected for one portion in which a level of the voice is relatively high, and the coding method suitable for the instrument sounds is selected for the other portion in which a level of the instrument sounds is relatively high.

[0103]
Therefore, in the server 1, a time series audio signal is not always encoded with certain one coding method in the entirety thereof; in some cases, one portion of the audio signal is encoded with one coding method, while the other portion of the audio signal is encoded with another different coding method.

A schedule of the coding methods executed for encoding a time series audio signal is set in the step S3, and this schedule is called the encoding schedule.

[0104]
In addition, the encoding schedule can also be set in advance so as to be adapted for an audio signal by an administrative operator of the server 1 (or a provider of the audio signal) manipulating the input device 14. However, in the case if it is difficult to decode and reproduce the audio signal in real time with the coding methods of the preset encoding schedule from the standpoints of the processing ability of the client terminal 3 and the transmission rate of the network 2, the coding method which brings about such a difficulty can be changed in the step S3 to another which can decode and reproduce the audio signal in real time.

[0105]
Here, a manner of recognizing the transmission rate of the network 2 will be described later.

[0106]
After setting of the encoding schedule, the CPU 12 goes to step S4 to determine whether or not the update (including both version-up of existing decoders and installation of new decoders) of the decoders of the client terminal 3 is required. That is to say, even in the case when an audio signal is encoded in accordance with the encoding schedule set in the step S3 and resulting coded data is transmitted to the client terminal 3, the audio signal cannot be reproduced if the client terminal 3 has no decoders capable of decoding the coded data. Therefore, the CPU 12 first recognizes the decoders 83_1 to $83_{N'}$ installed in the client terminal 3, and then determines whether any of the coded data resulted with the coding methods set in the encoding schedule cannot be decoded in the client terminal 3.

[0107]
Here, for example, the CPU 12 of the server 1 can recognize the decoders $83_1$to $83_{N'}$ by receiving, from the client terminal 3, respective IDs for the coding methods corresponding to the decoding methods executed in the decoders 83_1 to $83_{N'}$installed in the client terminal 3. In addition, as an alternative, the CPU 12 of the server 1 can also recognize the decoders 83_1 to $83_{N'}$ installed in the client terminal 3 by successively transmitting dummy data resulted from being encoded by the encoders 53_1 to 53_N, and then rendering the client terminal 3 to transmit back results of decoding of the dummy data made in the client terminal 3.

[0108]
In addition, the data transfer for rendering the server 1 to recognize the decoders 83_1 to $83_{N'}$ installed in the client terminal 3 may be performed, for example, in the step S2 along with data transfer for recognizing the processing ability of the client terminal 3 or may be performed immediately before the processing of step S4.

[0109]
If any of the coded data resulted with the coding methods set in the encoding schedule cannot

be decoded in the client terminal 3, it is determined in the step S4 that update of at least one decoder is required. In this case, the CPU 12 goes from step S4 to S5 in the case when it controls the communicating device 17 to transmit, to the client terminal 3, a confirmation message for confirming whether or not the update of the decoder is approved.

[0110]
The communicating device receives the confirmation message 27 of the client terminal 3 and displayed on the output device 25. Looking at the confirmation message, the user at the client terminal 3 manipulates the input device 24 and enters a message indicating whether the update is to be made or not (referred to as an update approval / disapproval message hereinafter). The update approval / disapproval message is transmitted from the communicating device 27 to the server 1 and then received by the communicating device 17 of the server 1. In addition, it is also possible to prepare setting to make a decision about approval or disapproval of the update beforehand in the client terminal 3, and to transmit the update approval / disapproval message from the client terminal 3 based on the setting.

[0111]
The update approval / disapproval message received by the communicating device 17 is supplied to the CPU 12. Based on the update approval / disapproval message, the CPU 12 determines in the step S6 whether or not the decoder is to be updated. That is to say, in the case if the update approval / disapproval message indicates approval of the update, the CPU 12determines in the step S6 that the decoder is to be updated, followed by going to step S7to execute a decoder updating process.

[0112]
That is to say, the external storage 16 stores a program module (decoder library) for rendering the computer to function as a decoder to decode the coded data outputted from each of the encoders 53_1 to 53_N. The CPU 12 reads out of the external storage 16 the decoder library for rendering the client terminal 3 to function as a decoder to decode one of the coded data resulted with the coding methods set in the encoding schedule which cannot be decoded in the client terminal 3. In addition, the external storage 16 stores decoder libraries operating on various CPUs and OSes, and the CPU 12 reads out of the external storage 16 the decoder library capable of operating in the client terminal 3 based on the processing ability thereof recognized in the step S2.

[0113]
Furthermore, the CPU 12 transmits, to the client terminal 3, the decoder library read out of the external storage 16 along with an install program for loading (installing) the decoder library in the client terminal 3. After the client terminal 3 receives both the decoder library and the install program, the install program is started up and executed, whereby the decoder library is installed in the client terminal 3.

[0114]

In addition, in the case when there are several ones of the coded data resulted with the coding methods set in the encoding schedule which cannot be decoded in the client terminal 3, the decoder libraries for rendering the client terminal 3 to function as decoders to decode the several coded data respectively are transmitted in the step S7 and are installed in the client terminal 3.

[0115]
In addition, the decoder library may be a dynamic link library loaded only when needed. However, in the case of the decoder library being loaded as a dynamic link library, however, it is required that the OS operating on the client terminal 3 can deal with the dynamic link library.

[0116]
Upon completion of the decoder updating process in the step S7, the CPU 12 goes to step S8 when the audio signals requested from the client terminal 3 are encoded into coded data and then transmitted via the network 2 in accordance with the encoding schedule.

[0117]
That is to say, the selection instructing unit 55 in the coding unit 53_m shown in the FIG. 5 gives an instruction to the encoding selecting circuit 56 in accordance with the encoding schedule, whereupon the switch 52 will select one of the encoders 53_1 to 53_N. By this way, the audio signal inputted to the frame cutting circuit 51 and cut in units of frame is supplied to the encoder selected by the switch 52 (the selected encoder) and encoded into coded data. This coded data is applied to the header inserting circuit 54 in which an ID is added to the coded data, followed by being supplied to the multiplexing unit 42, after that, the coded data is transmitted to the client terminal 3 as described above.

[0118]
More concretely, it is here assumed, for example, that in the case if a time series audio signal from the time t_0 to t_6 ($t_0 < t_6$, as shown in the FIG. 11 (A), is requested from the client terminal 3, and an encoding schedule shown in the FIG. 11 (B) is set. In addition, in the FIG. 11 (B), E_1 to E_4 represent the coding methods executed in the encoders 53_1 to 53_4, respectively.

[0119]
In the encoding schedule of the FIG. 11 (B), the coding methods E_1, E_2, E_3, E_4, E_2 and E_3 are designated for respective periods of t_0 to t_1, t_1 to t_2, t_2 to t_3, t_3 to t_4, t_4 to t_5, and t_5 to t_6, ($t_0 < t_1 < t_2 < t_3 < t_4 < t_5 < t_6$). As a result of that, in the periods of t_0 to t_1, t_1 to t_2, t_2 to t_3, t_3 to t_4, t_4 to t_5, and t_5 to t_6, therefore, the switch 52 will select the encoders 53_1, 53_2, 53_3, 53_4, 53_2 and 53_3, respectively; then, portions of the audio signal shown in the FIG. 11 (A) corresponding to the periods of t_0 to t_1, t_1 to t_2, t_2 to t_3, t_3 to t_4, t_4 to t_5, and t_5 to t_6 are encoded by the encoders 53_1, 53_2, 53_3, 53_4, 53_2 and 53_3, respectively, followed by being transmitted to the client terminal 3.

[0120]

Returning to the FIG. 9, when transmission of all the coded data resulted from encoding the audio signals requested from the client terminal 3 is completed in the step S8, the CPU 12 cuts off the connection between the server 1 and the client terminal 3, thus ending the transmitting process.

[0121]
On the other hand, in the case if the update approval / disapproval message indicates disapproval of the update, the CPU 12 determines in the step S6 that the decoder is not to be updated, followed by going to step S9 to execute change of the encoding schedule.

[0122]
That is to say, based on the processing ability of the client terminal 3 having been already recognized and the decoders installed in the client terminal 3, the CPU 12recognizes the coding method for which resulting coded data can be decoded in the client terminal 3 in real time. Then, the CPU 12 recognizes one or more of the coding methods set in the encoding schedule, for which resulting coded data cannot be decoded in the client terminal 3 in real time and changes them to the coding method for which resulting coded data can be decoded in the client terminal 3 in real time.

[0123]
More concretely, it is here assumed, for example, that the encoding schedule designates respectively the coding methods E_1, E_2, E_3, E_4, E_2 and E_3 for the periods of t_0 to t_1, t_1 to t_2, t_2 to t_3, t_3 to t_4, t_4 to t_5, and t_5 to t_6, as shown in the FIG. 11 (B); in such a case, when the coding methods for which resulting coded data can be decoded in the client terminal 3 in real time are E_1, E_2 and E_4, and the client terminal 3 include no decoder for decoding the coded data resulted with the coding method E_2, a portion of the encoding schedule, in which the coding method E_2 is designated, is changed to any of the coding method E_1, E_3 and E_4 for which resulting coded data can be decoded in the client terminal 3 in real time, as shown in the FIG. 11 (C). In the FIG. 11 (C), by way of example, the coding method for the audio signal is changed to the coding method E_1 in each of the periods of t_1 to t_2 and t_4 to t_5 where the coding method E_2 is designated.

[0124]
After the encoding schedule has been changed in the step S9, the CPU 12 goes to step S8where the audio signals requested from the client terminal 3 are encoded into coded data in accordance with the changed encoding schedule and is transmitted to the client terminal 3 via the network 2. Then, when transmission of all the coded data of the audio signals is completed, the CPU 12 cuts off the connection between the server 1and the client terminal 3, thus ending the transmitting process.

[0125]
In addition to the case when the user at the client terminal 3 does not want to update the decoders, the update approval / disapproval message indicating disapproval of the update is also transmitted from the client terminal 3, for example, in the following cases as well.

That is to say, for example, in the case when the remaining capacity of the external storage 26 in the client terminal 3 is not sufficient, or in the case when the client terminal 3 is of the portable small-size type and has no rewritable recording medium, the update approval / disapproval message indicating disapproval of the update is transmitted from the client terminal 3.

[0126]
On the other hand, in the case if there is no one of coded data resulted with the coding methods set in the encoding schedule that cannot be decoded in the client terminal 3, the CPU 12 determines in the step S4 that the update of the decoder is not required. In this case, the CPU 12 skips from step S4 to S8 where the audio signals requested from the client terminal 3 are encoded into coded data in accordance with the encoding schedule set in the step S3, and is transmitted to the client terminal 3 via the network 2. Then, when transmission of all the coded data of the audio signal is completed, the CPU 12cuts off the connection between the server 1 and the client terminal 3, thus ending the transmitting process.

[0127]
In addition, in the case when the update approval / disapproval message indicating disapproval of the update is transmitted from the client terminal 3, a request for designating the coding method for the audio signal can be transmitted together with the update approval / disapproval message. In this case, the encoding schedule can be changed in the step S9 in accordance with the request from the client terminal 3.

[0128]
In addition, in the case when the coding method in the encoding schedule can be changed in the step S9 upon receiving the update approval / disapproval message indicating disapproval of the update from the client terminal 3, it is possible to exclude the coding method before the change of the encoding schedule from being used again when providing the coded data to the client terminal 3 since then. This can be realized by storing the client terminal 3 and the coding method before the change of the encoding schedule in a corresponding manner.

[0129]
Next, the receiving process executed by the client terminal 3 will be described with reference to a flow chart of the FIG. 12.

[0130]
In the case when requesting audio signals for the server 1, the user manipulates the input device 24 to issue a request for the audio signals. In this case, the CPU 22 controls the communicating device 27 to transmit a connection request to the server 1 via the network 2 in the step S11. In response to the connection request, a communication link between the server 1. And, the client terminal 3 is established in the step S1 of the FIG. 9 on the server 1 side. When the communication link between the server 1 and the client terminal 3 is established, the request for the audio signals is transmitted to the server 1.

[0131]
After that, in the step S12, the CPU 22 of the client terminal 3 transmits the processing ability thereof to the server 1. In the server 1, the processing ability of the client terminal 3 is received and recognized, following which an encoding schedule is planned. Then, in the case if the update of the decoder is required, the server 1 transmits a confirmation message to the client terminal 3, and in the case if not required, the server 1 will transmit the coded data resulted from encoding the audio signals, which have been requested from the client terminal 3, to the client terminal 3 in accordance with the encoding schedule.

[0132]
In the client terminal 3, after transmitting the processing ability thereof, it is determined in the step S13 whether or not a confirmation message has been transmitted to the client terminal 3. In the case if it is determined in the step S13 that the confirmation message has been transmitted, the communicating device receives the confirmation message 27 and is supplied to the CPU 22. Upon receiving the confirmation message, the CPU 22 supplies the confirmation message to the output device 25 and displays it thereon.

[0133]
Looking at the confirmation message displayed on the output device 25, the user at the client terminal 3 manipulates the input device 24 and enters an update approval/disapproval message indicating whether the update of the decoder is to be made or not. When the input device 24 is manipulated and the update approval / disapproval message is entered, the CPU 22 goes to step S14 to determine whether the update approval / disapproval message requests or rejects the update. In the case if it is determined in the step S14 that the update approval / disapproval message indicates request of the update, the CPU 22 goes to step S15 to control the communicating device 27 such that the update approval / disapproval message indicating request (approval) of the update is transmitted to the server 1.

[0134]
After receiving the update approval / disapproval message, the server 1 transmits both the decoder library and the install program to the client terminal 3 as described above, the client terminal 3 receives them and then executes an updating process in the step S16.
That is to say, in the client terminal 3, the communicating device receives both the decoder library and the install program 27. Then, the install program is executed in the CPU 22, whereby the decoder library is installed in the external storage 26.

[0135]
After that, in the step S17, the client terminal 3 receives the coded data transmitted from the server 1, followed by decoding and reproducing the coded data.

[0136]
That is to say, in the decoding unit 72_m as shown in the FIG. 8, the header extracting circuit 81 extracts the ID added to the coded data, and recognizes the decoding method for the coded data based on the extracted ID. Furthermore, based on the recognized result of the

decoding method, the header extracting circuit 81 controls the switch 82 to select one of decoders 83_1 to $83_{N'}$ (or one of decoders 83_1 to $83_{N'}$ and a new decoder corresponding to the decoder library in the case when the decoder library has been installed in the updating process of step S16). Then, the header extracting circuit 81then supplies the coded data, deprived of the associated ID, to one of the decoders 83_1 to $83_{N'}$ selected by the switch 82 (the selected decoder).

[0137]
The selected decoder decodes the coded data, applied to it through the switch 82, into the original audio signal which is then supplied to the audio signal output circuit 63 (FIG. 7). When all the coded data transmitted from the server 1 is completely decoded and reproduced, the receiving process is ended.

[0138]
In addition, in the case if it is determined in the step S14 that the update approval/disapproval message indicates rejection of the update, the CPU 22 goes to step S18 to control the communicating device 27 such that the update approval / disapproval message indicating rejection (disapproval) of the update is transmitted to the server 1.

[0139]
In the server 1 having received the update approval/disapproval message, as described above, the encoding schedule is changed to present the coding methods each of which can be decoded by any of the decoders 83_1 to $83_{N'}$ installed in the client terminal 3. Then, the coded data encoded in accordance with the changed encoding schedule is transmitted to the client terminal 3. In the client terminal 3, the CPU 22 goes from step S18 to S7 to receive the coded data for decoding and reproducing the coded data, as described above, following which the receiving process is ended.

[0140]
On the other hand, in the case if it is determined in the step S13 that the confirmation message is not transmitted, this means that the update of the decoders is not required, for this reason, in the case when the coded data is transmitted from the server 1, the CPU 22 in the client terminal 3 goes to step S17 to receive the coded data for decoding and reproducing the coded data, as described above, following which the receiving process is ended.

[0141]
In addition, in the case when the decoder library is installed in the updating process of step S16, the CPU 22executes the installed decoder library and constructs a new decoder in addition to the decoders 83_1 to $83_{N'}$ shown in the FIG. 8 (i.e., upon execution of the installed decoder library, the CPU 22 is rendered to function also as a decoder corresponding to the installed decoder library in addition to the decoders 83_1 to $83_{N'}$. Then, in the case when the header extracting circuit 81 extracts the ID indicating the coding method which provides the coded data to be decoded by the new decoder, the switch 82 is controlled so as to select the new decoder, whereby the coded data, to which that ID has been added, is supplied to the

new decoder. By this way, the client terminal 3 is enabled to decode the coded data which cannot be decoded by any of the decoders 83_1 to $83_{N'}$ which are inherently installed in the client terminal 3.

[0142]
Here, in the case when the update approval / disapproval message indicating rejection of the update is transmitted in the step S18, it is possible to transmit a request for supply of the coded data resulted with a certain coding method (i.e., the coded data which can be decoded by any of the decoders installed in the client terminal 3 itself). In this case, in the server 1, the encoding schedule is changed to include the requested coding method in the step S9 of the FIG. 9.

[0143]
As described above, because the server 1 has a plurality of encoders 53_1 to 53_N, it is possible to select and provide, for example, the coded data resulted with the coding method optimum for the processing ability of the client terminal 3, or the coded data resulted with the coding method optimum for each of different portions of an audio signal. In addition, in the case when there is an allowance in the processing ability of the client terminal 3, the server 1 can select and provide the coded data resulted with the coding method with which the original audio signal is decoded and reproduced with better sound quality, for example. Furthermore, the server 1 can also select and provide, for example, the coded data resulted with the coding method which is requested from the client terminal 3.

[0144]
In addition, the server 1 recognizes the decoders (decoder libraries) 83_1 to $83_{N'}$installed in the client terminal 3, and in the case if the client terminal 3 has not a decoder capable of decoding the coded data to be transmitted to it, that decoder (decoder library) is transmitted from server 1 to the client terminal 3 to be loaded therein, therefore, the user can receive supply of audio signals through an interface of unified standard without paying particular care to the decoders installed in the client terminal 3 and the coding methods prepared in the server 1 for encoding audio signals. Moreover, because of a decoder necessary for decoding the coded data being installed in a virtually automatic manner, even when a new encoder is added on the server 1 side, the user is not required to install a decoder corresponding to the added encoder by himself or herself. Accordingly, in such an extreme case that the client terminal 3 has no decoders, the user can receive supply of audio signals because necessary data is installed if the client terminal 3 is only able to access the server 1.

[0145]
Next, in the network 2 shown in the FIG. 1, the transmission rate in transmitting coded data from the server 1 to the client terminal 3 (i.e., the transmission band allocated to the coded data) generally varies due to the amount of traffic, etc. except the case of using a protocol reserving the band used, such as RSVP (Resource Reservation Protocol) specified in RFC (Request For Comments) 2205 (issued by IFTF (Internet Engineering Task Force)), for example. Accordingly, if the transmission rate of the network 2 is reduced down smaller than

the data rate of the coded data, transmission of the coded data becomes so late that audio signals cannot be reproduced in real time.

[0146]
Thus, in view of the above problem, the server 1 is designed to detect the transmission rate of the network 2 at the time of transferring data between the server 1 and the client terminal 3, and to change the encoding schedule so as to include the coding method which can provide the coded data having a bit rate not higher than the detected transmission rate of the network 2.

[0147]
A manner of detecting the transmission rate of the network 2 will now be described below with reference to the FIG. 13.

[0148]
Generally, transmission between the server 1 and the client terminal 3 is performed such that a request for audio signals is issued from the client terminal 3, and in response to the request the server 1 transmits data, or that the server 1 transmits data, and upon receiving the data, the client terminal 3 transmits an acknowledge signal ACK to the server 1.

[0149]
With the above communicating process in mind, for example, the CPU 12 of the server memorizes the time t1 when the server 1 receives a request for data from the client terminal 3, as shown in the FIG. 13. Furthermore, the CPU 12 also memorizes the bit amount n1 of data transmitted from the server 1 in response to the request. After that, the CPU 12waits for a next request for data transmitted from the client terminal 3, and then memorizes the time t2 when the server 1 receives the next request for data. Furthermore, the CPU 12 memorizes the bit amount n2 of data transmitted from the client terminal 3 along with the next request. Then, the CPU 12 derives the transmission rate B (bps) of the network 2 from, e.g., the following formula:

[0150]
$B = (n1 + n2) / (t2 - t1)$ … (1)

[0151]
In addition, here, it is to be noted that a period of time from the time when the server 1 receives the request from the client terminal 3 to the time when it transmits the data in response to the request, and a period of time from the time when the client terminal 3receives the data from the server 1 to the time when it transmits the next request are ignored and assumed to be zero. Although the transmission rate B can be derived more accurately in consideration of those periods of time as well, ignoring those periods of time provides an estimated value of the transmission rate B which is relatively lower by an amount corresponding to those periods of time, and hence the bit rate of the coded data is given with some margin. (In other words, since the actual transmission rate is larger than the

transmission rate B derived from the above formula (1), transmission of the coded data can be avoided from becoming too late even if the bit rate of the coded data exceeds the transmission rate B within the range of the margin.)

[0152]
The server 1 (the CPU 12 thereof) is designed to detect the transmission rate, as described, prior to transmitting audio signals, and to plan the encoding schedule. Furthermore, the server 1 is designed to detect the transmission rate and to change the encoding schedule even during transmission of audio signals (coded data resulted from encoding of the audio signals in the illustrated embodiment) in the step S8 of the FIG. 9.

[0153]
That is to say, as shown in the FIG. 14, since the transmission rate usually varies with time, the server 1 derives the transmission rate B in accordance with the above formula (1) for each predetermined period of time t (the period of time t is assumed to be longer than the period of time from the time when the server 1 transmits an audio signal to the time when the client terminal 3 having received the audio signal transmits an acknowledge signal ACK).
Then, the server 1 changes the encoding schedule for each period of time T (≧ t).

[0154]
In the case of t = T, for example, whenever the transmission rate B is derived, it is checked whether the derived transmission rate is larger or smaller than the bit rate of the coded data resulted with the coding method set in the encoding schedule. Then, in the case if the bit rate exceeds the transmission rate B, the encoding schedule is changed so as to include the encoding method which provides the coded data having a bit rate not larger than the transmission rate B.

[0155]
Here, it is also possible to detect the transmission rate B immediately before the timing to change the encoding schedule or immediately after the timing to change the previous encoding schedule, and to change the encoding schedule based on the detected transmission rate B.

[0156]
Furthermore, change of the encoding schedule may be performed, for example, whenever such a process is repeated S times (S is an integer of one or more) as that the server 1 transmits an audio signal and the client terminal 3 having received the audio signal transmits the acknowledge signal ACK.

[0157]
In addition, in this case with S being 2 or more, the transmission rate B can be detected 2 or more times for a period of time from one change of the encoding schedule to the next change thereof; in the case when the transmission rate B can be detected 2 or more times, the encoding schedule may be changed based on either one of the detected transmission rates B,

or 2 or more thereof.

[0158]
In the case when changing the encoding schedule based on 1 of the 2 or more detected transmission rates B, the encoding schedule can be changed based on a maximum or minimum value of the transmission rates B which is detected out from among them.
In addition, in this case, it is desirable to employ a minimum value than a maximum value from the standpoint of safety (i.e., the standpoint of preventing transmission of the audio signal from becoming too late for the start of reproduction thereof).

[0159]
In addition, in the case when changing the encoding schedule based on the 2 or more detected transmission rates B, the encoding schedule can be changed based on, for example, an average value of them, or a middle value between maximum and minimum values thereof (an average value of the maximum and minimum values).

[0160]
As described above, since the transmission rate of the network 2 is detected and the encoding schedule is changed to employ the coding method which provides the coded data having a bit rate adapted for the transmission rate of the network 2, the server 1 will select the encoder for encoding an audio signal into the coded data with the adapted coding method, and therefore transmission of the coded data is avoided from becoming too late to reproduce the audio signal in real time.

[0161]
Here, in the case of the network 2 comprising Internet, for example, the protocol called RTP (Real-time Transport Protocol), which is specified in RFC 1889 (issued by IFTE), is usable, and, since the transmission time is assigned to each packet for use in RTP, the transmission rate B can be derived based on the transmission time assigned to the packet rather than the above formula (1).

[0162]
In addition, in the case of employing the above-mentioned RSVP, since the reserved band (transmission rate) is secured until disconnection of the communication link, it is not required to detect the transmission rate B and to change the encoding schedule during transmission of audio signals in the step S8 of the FIG. 9, taking into account that the transmission rate varies with time. That is to say, in the case of the use of RSVP, there is no necessity of changing the encoding schedule in consideration of a variation in the transmission rate with time once the encoding schedule is planed based on the transmission rate to be secured before starting transmission of audio signals.

[0163]
Furthermore, the transmission rate may be detected out in the client terminal 3 instead of the server 1, and then transmitted to the client terminal 3 from the server 1.

[0164]
In addition, in the case when the coding method set in the encoding schedule is changed during transmission of the coded data as described above, the client terminal 3 must have a decoder capable of decoding the coded data resulted with the changed coding method.

[0165]
Next, FIG. 16 shows another exemplified construction of the coding unit 41_m in the FIG. 4. In addition, the components corresponding to those in the case of the FIG. 5 are denoted by the same reference numerals.

[0166]
In the embodiment shown in the FIG. 5, the switch 52 is controlled to select one of the encoders 53_1 to 53_N, and an audio signal is decoded by the selected encoder, followed by being transmitted, in this case, processing executed in that embodiment is however somewhat complicated because an audio signal requires to be encoded in response to each request for the audio signal.

[0167]
Thus, with the view of making the processing simpler, in an embodiment shown in the FIG. 6, an audio signal is previously encoded into coded data by each of the encoders 53_1 to 53_N and stored in each of storages 91_1 to 91_N comprising, e.g., magnetic disks (hard disks), MOes (magneto-optical disks), optical disks, magnetic tapes, or phase change disks. Then, a read-out unit 56 will select one of the storages 91_1 to 91_N under control of the encoding selecting circuit 56 and reads the coded data out of the selected storage.

[0168]
That is to say, each frame outputted from the frame cutting circuit 51 is supplied to all of the encoders 53_1 to 53_N and encoded into coded data. The coded data obtained by the encoders 53_1 to 53_N are supplied to and stored (recorded) in the storages 91_1 to 91_N, respectively.

[0169]
After that, when a request for an audio signal is issued from the client terminal 3, the encoding selecting circuit 56 controls the read-out unit 92 in accordance with an instruction based on the encoding schedule provided from the selection instructing unit 55.
By this way, the read-out unit 92 will select one of the storages 91_1 to 91_Ncorresponding to the instruction from the selection instructing unit 55 and reads the coded data out of the selected storage. The read-out coded data is supplied to the header inserting circuit 54, followed by being transmitted as described above.

[0170]
With the encoder 41_m described above, the scale of the server 1 is increased because the storages 91_1 to 91_N are required additionally and the encoders 53_1 to 53_N must be operated in parallel in the case of taking in the audio signal in real time, while the need of encoding an

audio signal in response to each request for the audio signal is eliminated.

[0171]
In addition, as described above in connection with FIG. 11, the illustrated embodiment is constructed to encode each portion of a time series audio signal into coded data with one appropriate coding method successively, in the case when the real-time reproduction is not required, or in the case when the transmission rate is sufficiently large even when real-time reproduction is required, or the like, however, the coded data E_1 to E_N resulted from encoding a time series audio signal by the encoders 53_1 to 53_N, for example, may be all transmitted to the client terminal 3 as shown in the FIG. 17. In this case, the client terminal 3 can select the coded signal resulted with the desired coding method and decode the selected coded data to reproduce the audio signal.

[0172]
In addition, while audio signals are processed in the illustrated embodiment, the present invention is also applicable to other signals such as video signals, other types of time series signals, and signals being not in time series.

[0173]
Furthermore, the network 2 may be a wire or wireless system so long as it is a bidirectional network.

[0174]
The encoders 53_1 to 53_N as components of the server 1 and the decoders 83_1 to $83_{N'}$ as components of the client terminal 3 can be realized by rendering a CPU (an information processing unit or a computer) to execute a computer program (software) as described above, or by dedicated hardware. However, in the case when the decoders installed in the client terminal 3 are all constructed of hardware, it is difficult to update the decoders from the server 1.

[0175]
In the case when the processing executed by the server 1 and the client terminal 3 is realized with a computer program, the computer program may be provided in the form of a recording medium such as a CD-ROM (Compact Disc—Read Only Memory) on which it is recorded or may be provided by transmission via Internet or any other suitable transmitting medium.

[0176]
In addition, the encoders 41_1 to 41_M in the FIG. 4 are able to encode audio data in accordance with the same encoding schedule or different encoding schedules planned independently of one another.

[0177]
[Effect of the invention]
According to the transmitting apparatus as described in the Claim 1 and the transmitting

method as described in the Claim 12, as well as the providing medium as described in the Claim 22, one coding method for encoding a part or the whole of a digital signal is instructed from among a plurality of coding methods, and the coded data obtained with the instructed coding method is selected. Then, to the selected coded data, the coding method information indicating the coding method used for obtaining the selected coded data is added. Accordingly, the coded data can be decoded in accordance with the coding method information.

[0178]
According to the receiving apparatus as described in the Claim 32 and the receiving method as described in the Claim 37, as well as the providing medium as described in the Claim 41, the coding method information added to coded data and indicating a coding method used for obtaining the coded data is extracted, and a decoding method to decode the coded data is recognized based on the extracted coding method information. Then, according to the recognized decoding method, the coded data is decoded. Accordingly, for example, even when the coded data is encoded with various coding methods, it is possible to decode the coded data.

[0179]
According to the providing medium as described in the Claim 45, the coded data and the coding method information are provided which are obtained by instructing, from among a plurality of coding methods, one for encoding a part or the whole of a digital signal, selecting coded data resulted from encoding the digital signal with the instructed coding method, and adding, to the selected coded data, the coding method information indicating the coding method used for obtaining the selected coded data. Accordingly, the coded data can be decoded in accordance with the coding method information.

[0180]
According to the transmitting apparatus as described in the Claim 46 and the transmitting method as described in the Claim 62, as well as the providing medium as described in the Claim 78, a transmission rate of a transmission line is detected, and one coding method capable of providing the coded data having a bit rate corresponding to the detected transmission rate of the transmission line is selected, from among a plurality of coding methods. Then, the coded data is transmitted based on the selected coding method. Accordingly, for example, in the case of decoding and reproducing the coded data in real time, transmission of the coded data can be avoided from becoming too late.

[0181]
According to the receiving apparatus as described in the Claim 94 and the receiving method as described in the Claim 96, as well as the providing medium as described in the Claim 98, the coded data encoded by a coding method capable of providing data having a bit rate corresponding to a transmission rate of a transmission line is received, and the received coded data is decoded. Accordingly, the coded data can be decoded in real time.

[Brief explanation of the figures]

[FIG. 1] It is a diagram which shows an exemplified construction of one implementation embodiment of a transmission system to which the present invention is applied.

[FIG. 2] It is a block diagram which shows an exemplified construction of hardware of a server 1 in the FIG. 1.

[FIG. 3] It is a block diagram which shows an exemplified construction of hardware of a client terminal 3 in the FIG. 1.

[FIG. 4] It is a block diagram which shows an exemplified functional construction of the server 1 in the FIG. 2.

[FIG. 5] It is a block diagram which shows an exemplified construction of a coding unit 41_m in the FIG. 4.

[FIG. 6] It is a diagram which shows a format of data outputted from a header inserting circuit 54 in the FIG. 5.

[FIG. 7] It is a block diagram which shows an exemplified functional construction of the client terminal 3 in the FIG. 3.

[FIG. 8] It is a block diagram which shows an exemplified construction of a decoding unit 72_m in the FIG. 7.

[FIG. 9] It is a flow chart for the purpose of explaining a transmitting process executed by the server 1.

[FIG. 10] They are the diagrams for the purpose of explaining a process executed in the step S2 of the FIG. 9.

[FIG. 11] They are the charts which show an encoding schedule.

[FIG. 12] It is a flow chart for the purpose of explaining a receiving process executed by the client terminal 3.

[FIG. 13] It is a diagram for the purpose of explaining a manner of determining the transmission rate of a network 2.

[FIG. 14] It is a diagram for the purpose of explaining the timing to change the encoding schedule.

[FIG. 15] It is a diagram for the purpose of explaining the timing to change the encoding schedule.

[FIG. 16] It is a block diagram which shows another exemplified construction of the coding unit 41_m in the FIG. 4.

[FIG. 17] It is a diagram for the purpose of explaining a method of transmitting the coded data to the client terminal 3.

[Explanation of the reference numerals]
1: server;
2: network;
3: client terminal;
11: ROM;
12: CPU;
13: RAM;
14: input device;
15: output device;
16: external storage device;
17: communicating device;
21: ROM;
22: CPU;
23: RAM;
24: input device;
25: output device;
26: external storage device;
27: communicating device;
31: audio signal input circuit;
32: coding circuit;
33: transmitting circuit;
41_1 to 41_M: coding unit;
42: multiplexing unit;
51: frame cutting circuit;
52: switch;
53_1 to 53_N: encoders;
54: header inserting circuit;
55: selection instructing unit;
56: encoding selecting circuit;
61: receiving circuit;
62: decoding circuit;
63: audio signal output circuit;
71: separating unit;
71_1 to 71_M: decoding unit;
81: header extracting circuit;
82: switch;
83_1 to $83_{N'}$: decoders;
91_1 to 91_N: storage;
92: read-out unit
[Date of submission]
Heisei 10 (1998) Year 6 Month 8 Day
[Procedural amendment 1]
[Document name as the object of amendment]
Section of Detailed Explanation
[Item name as the object of amendment]

0123
[Amendment method]
Change
[Contents of amendment]
[0123]
More concretely, it is here assumed, for example, that the encoding schedule designates respectively the coding methods E_1, E_2, E_3, E_4, E_2 and E_3 for the periods of t_0 to t_1, t_1 to t_2, t_2 to t_3, t_3 to t_4, t_4 to t_5, and t_5 to t_6, as shown in the FIG. 11 (B); in such a case, when the coding methods for which resulting coded data can be decoded in the client terminal 3 in real time are E_1, $\underline{E_3}$ and E_4, and the client terminal 3 include no decoder for decoding the coded data resulted with the coding method E_2, a portion of the encoding schedule, in which the coding method E_2 is designated, is changed to any of the coding method E_1, E_3 and E_4 for which resulting coded data can be decoded in the client terminal 3 in real time, as shown in the FIG. 11 (C).
In the FIG. 11 (C), by way of example, the coding method for the audio signal is changed to the coding method E_1 in each of the periods of t_1 to t_2 and t_4 to t_5 where the coding method E_2 is designated.

[Procedural amendment 2]
[Document name as the object of amendment]
Section of Detailed Explanation
[Item name as the object of amendment]
0145
[Amendment method]
Change
[Contents of amendment]
[0145]
Next, in the network 2 shown in the FIG. 1, the transmission rate in transmitting coded data from the server 1 to the client terminal 3 (i.e., the transmission band allocated to the coded data) generally varies due to the amount of traffic, etc. except the case of using a protocol reserving the band used, such as RSVP (<u>Resource</u> Reservation Protocol) specified in RFC (Request For Comments) 2205 (issued by IFTF (Internet Engineering Task Force)), for example.
Accordingly, if the transmission rate of the network 2 is reduced down smaller than the data rate of the coded data, transmission of the coded data becomes so late that audio signals cannot be reproduced in real time.

FIG. 1

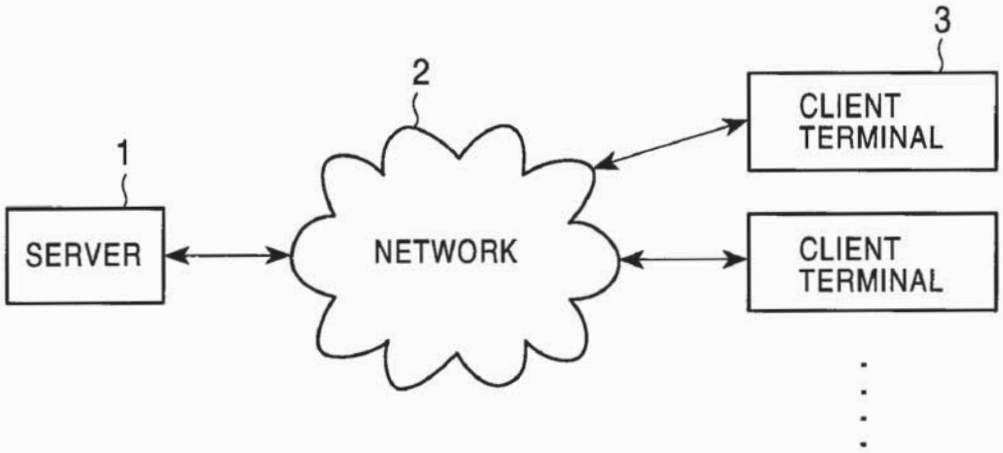

FIG. 2

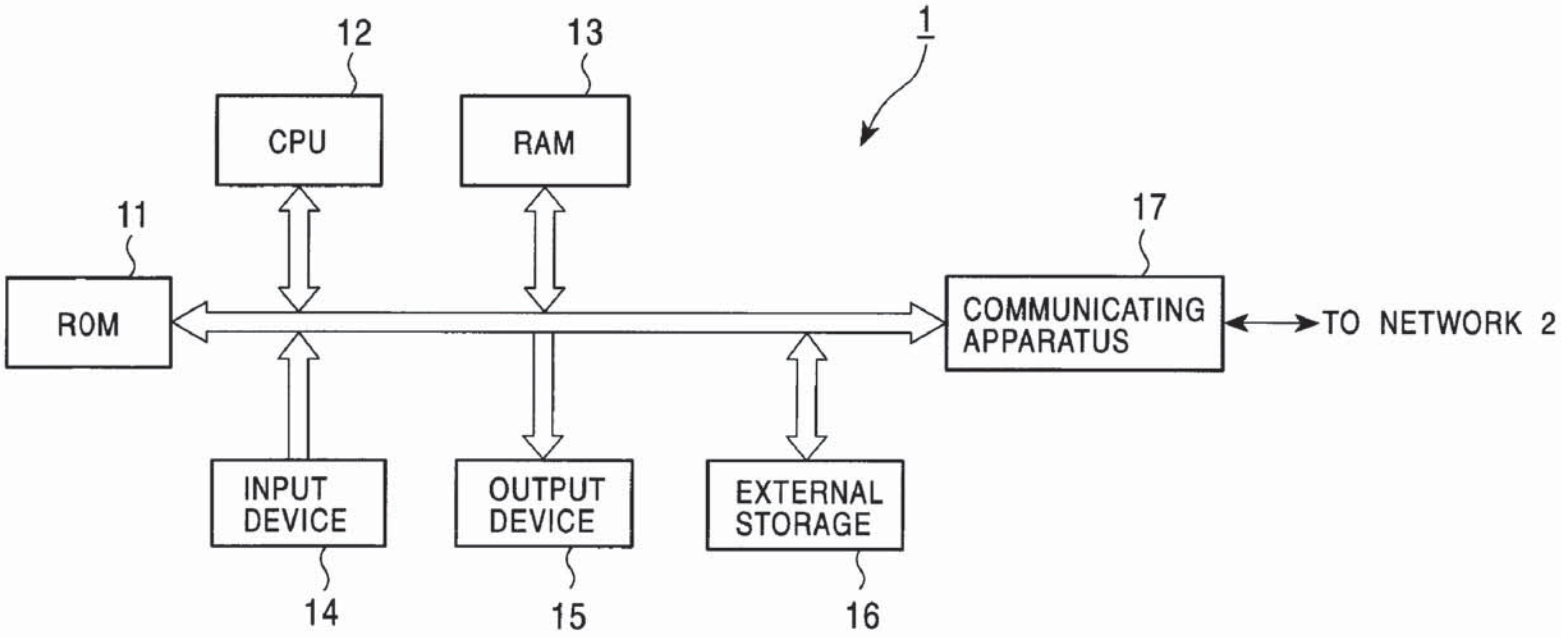

SERVER 1

FIG. 3

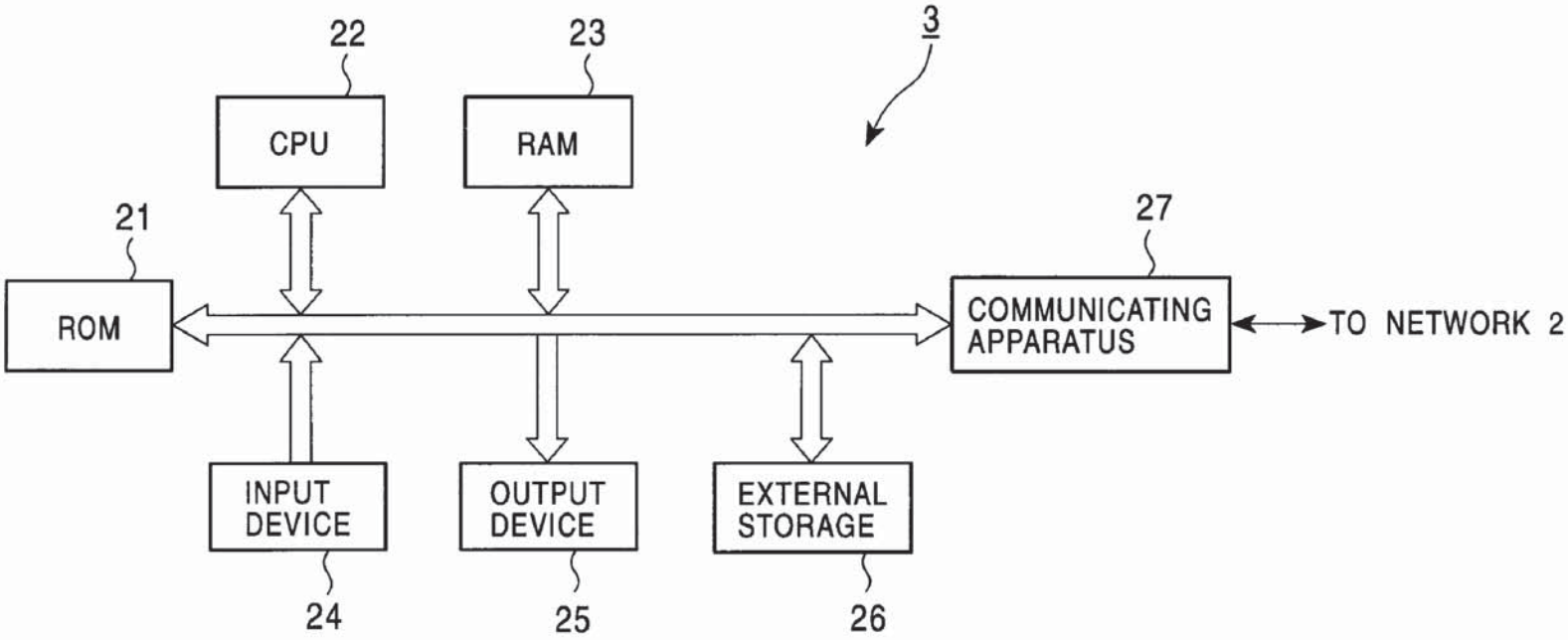

Client terminal 3

FIG. 4

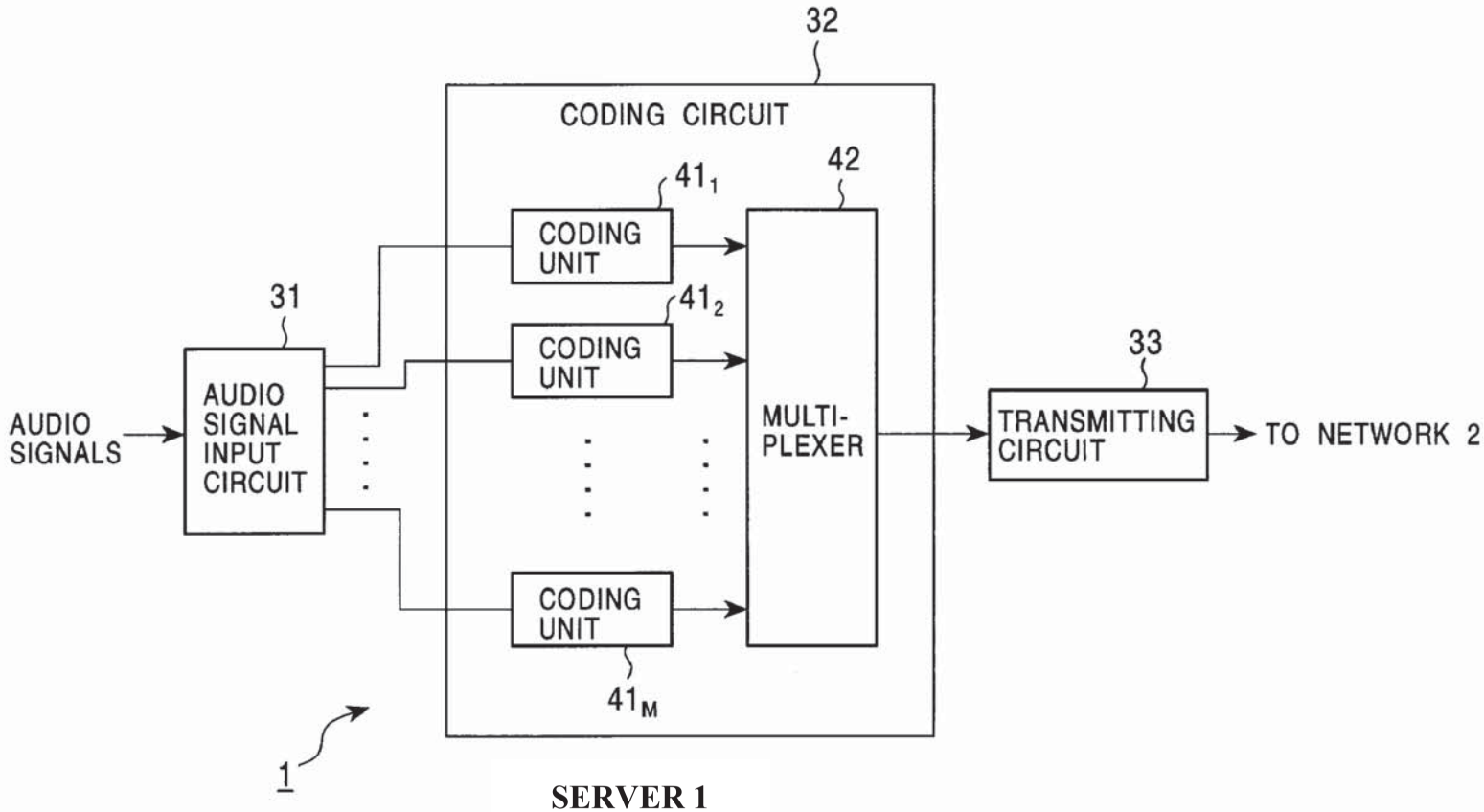

SERVER 1

FIG. 5

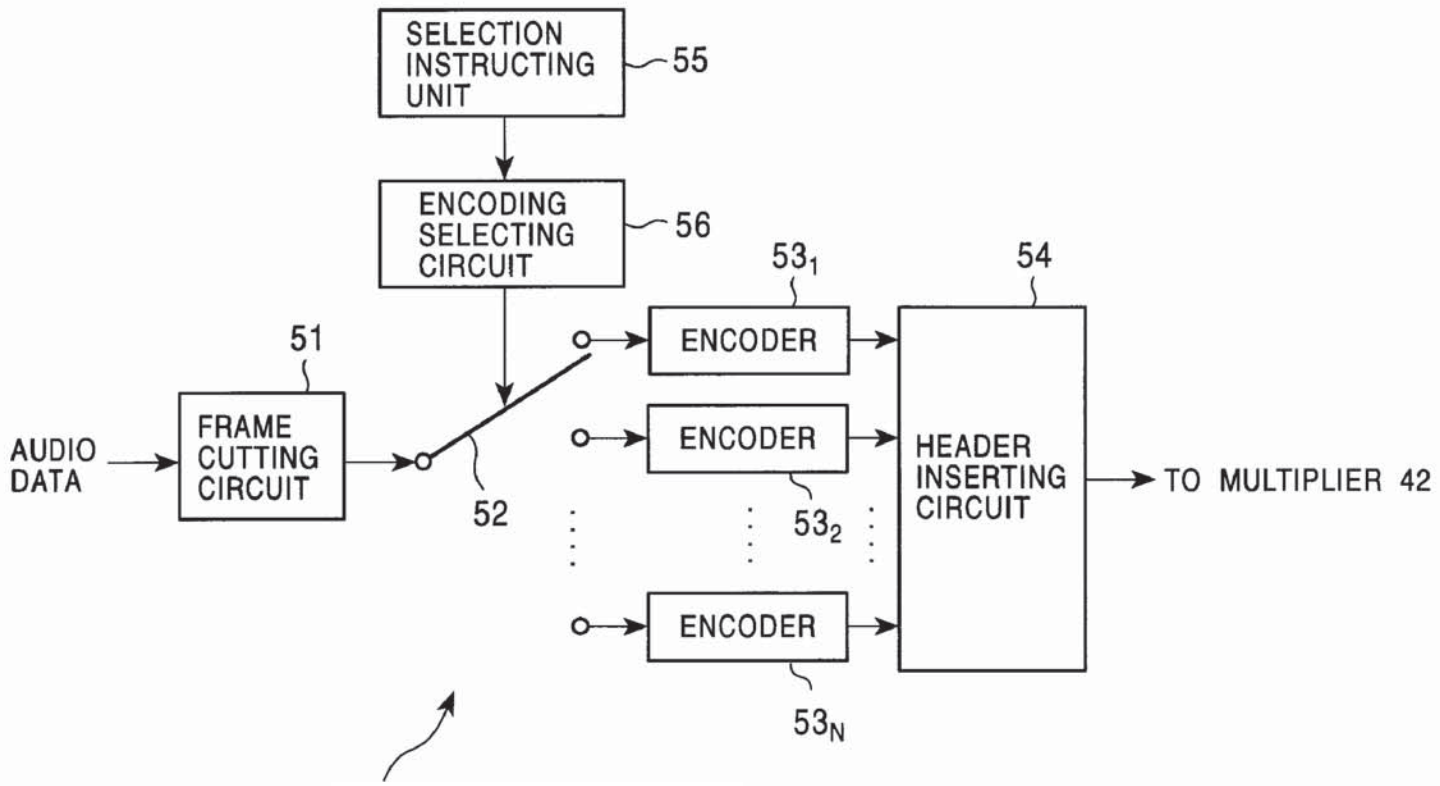

Encoding unit 41m

FIG. 6

IDm	CODED DATA OUTPUTTED FROM ENCODER 53m

Output data format of the header inserting circuit

FIG. 7

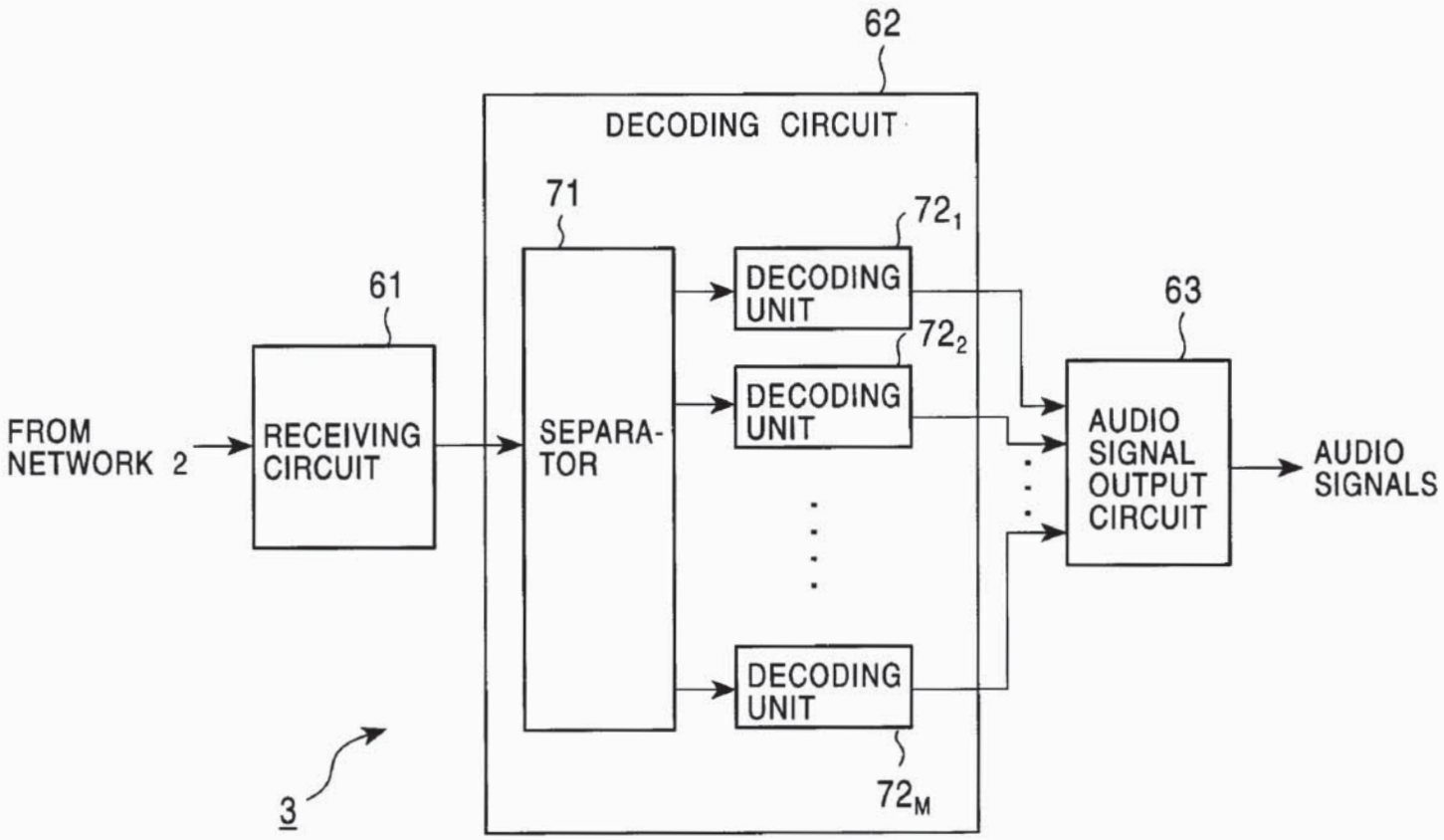

CLIENT TERMINAL 3

FIG. 8

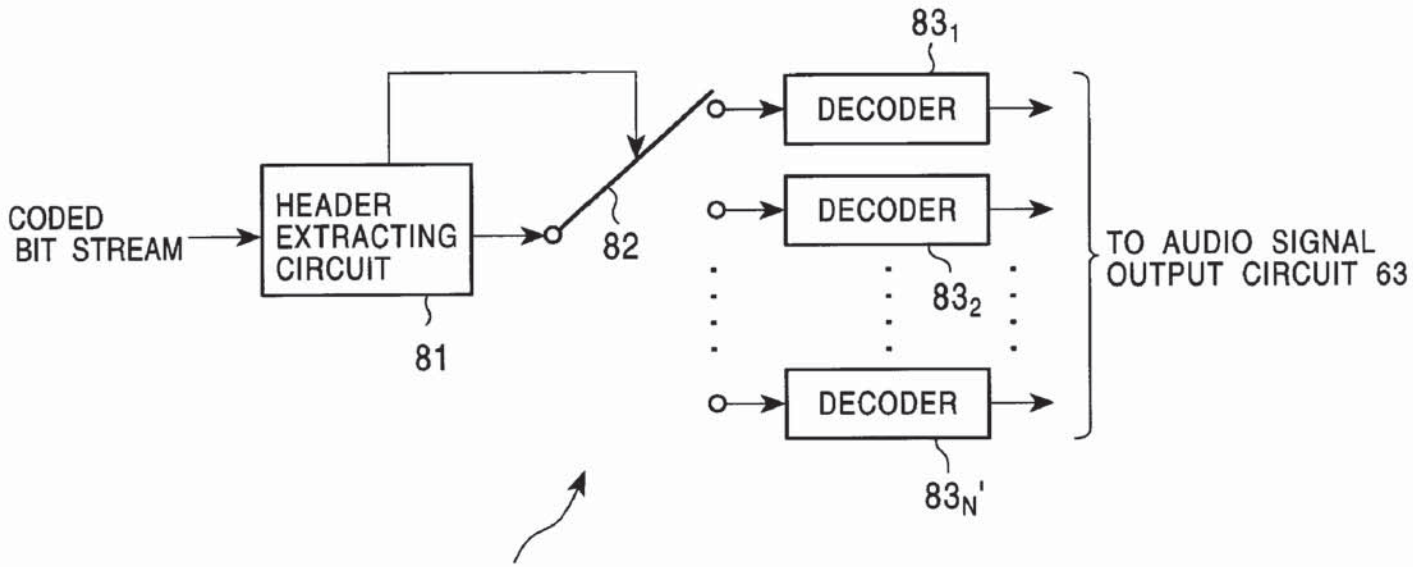

DECODING UNIT 72M

FIG. 9

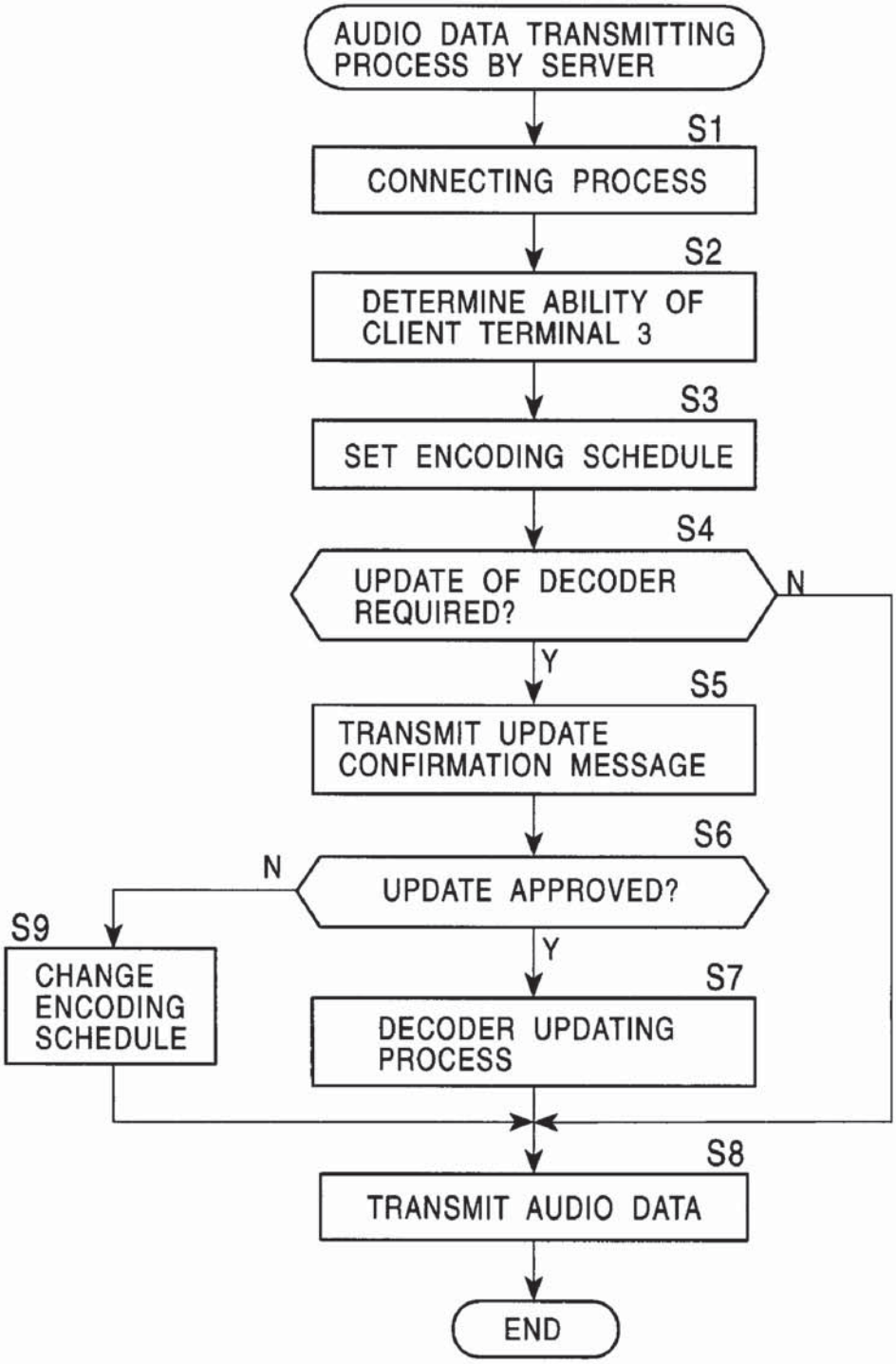
AUDIO DATA TRANSMITTING PROCESS BY SERVER
S1
CONNECTING PROCESS
S2
DETERMINE ABILITY OF CLIENT TERMINAL 3
S3
SET ENCODING SCHEDULE
S4
UPDATE OF DECODER REQUIRED?
N
Y
S5
TRANSMIT UPDATE CONFIRMATION MESSAGE
S6
UPDATE APPROVED?
N
S9
CHANGE ENCODING SCHEDULE
Y
S7
DECODER UPDATING PROCESS
S8
TRANSMIT AUDIO DATA
END

FIG. 10A

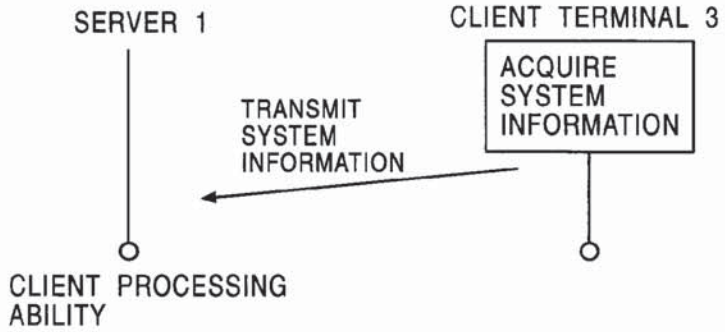

FIG. 10B

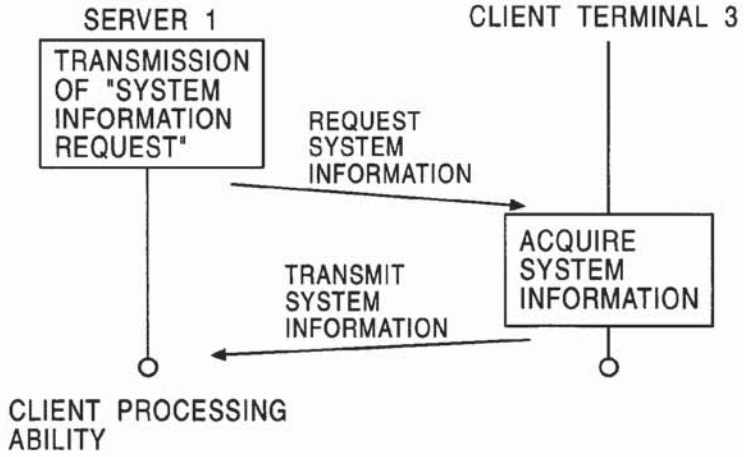

FIG. 10C

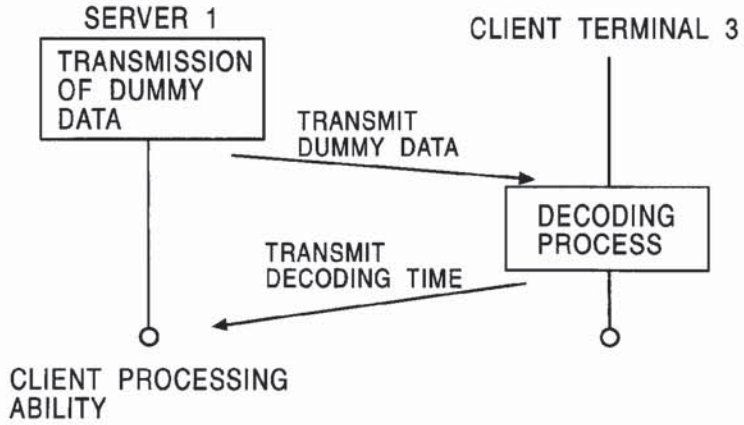

FIG. 11

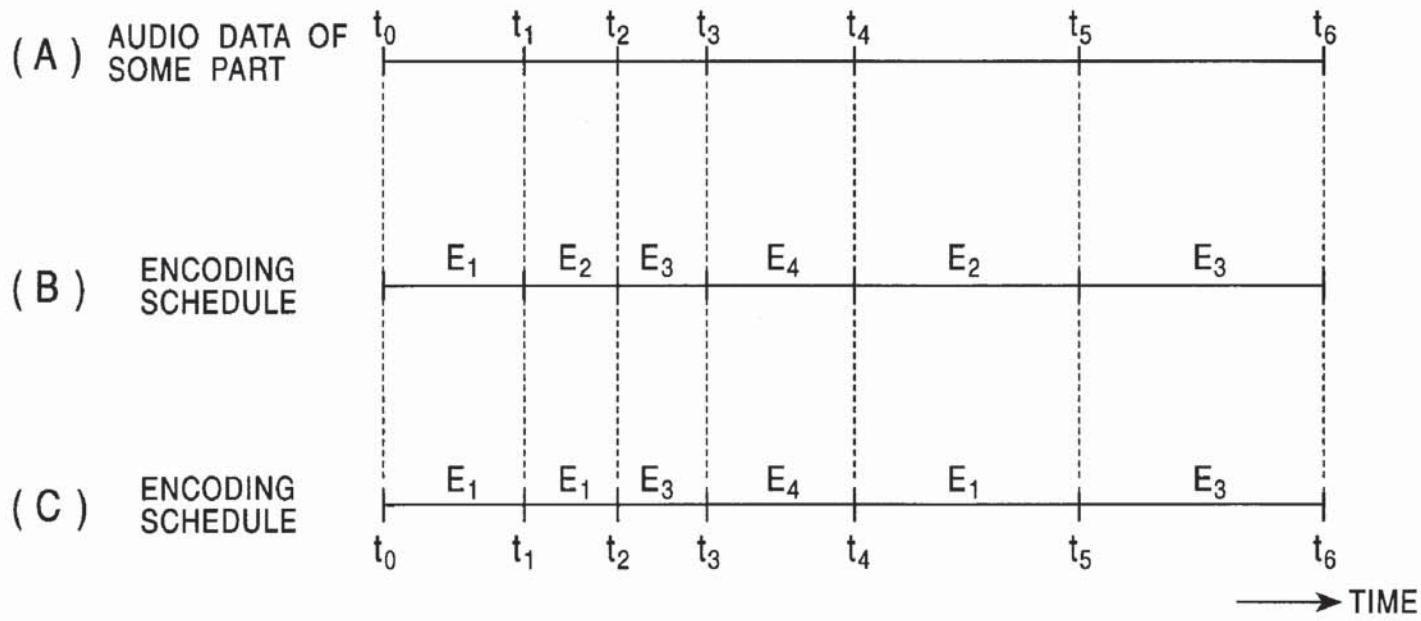
(A) AUDIO DATA OF SOME PART
(B) ENCODING SCHEDULE
(C) ENCODING SCHEDULE
t_0 t_1 t_2 t_3 t_4 t_5 t_6
E_1 E_2 E_3 E_4 E_2 E_3
E_1 E_1 E_3 E_4 E_1 E_3
TIME

FIG. 12

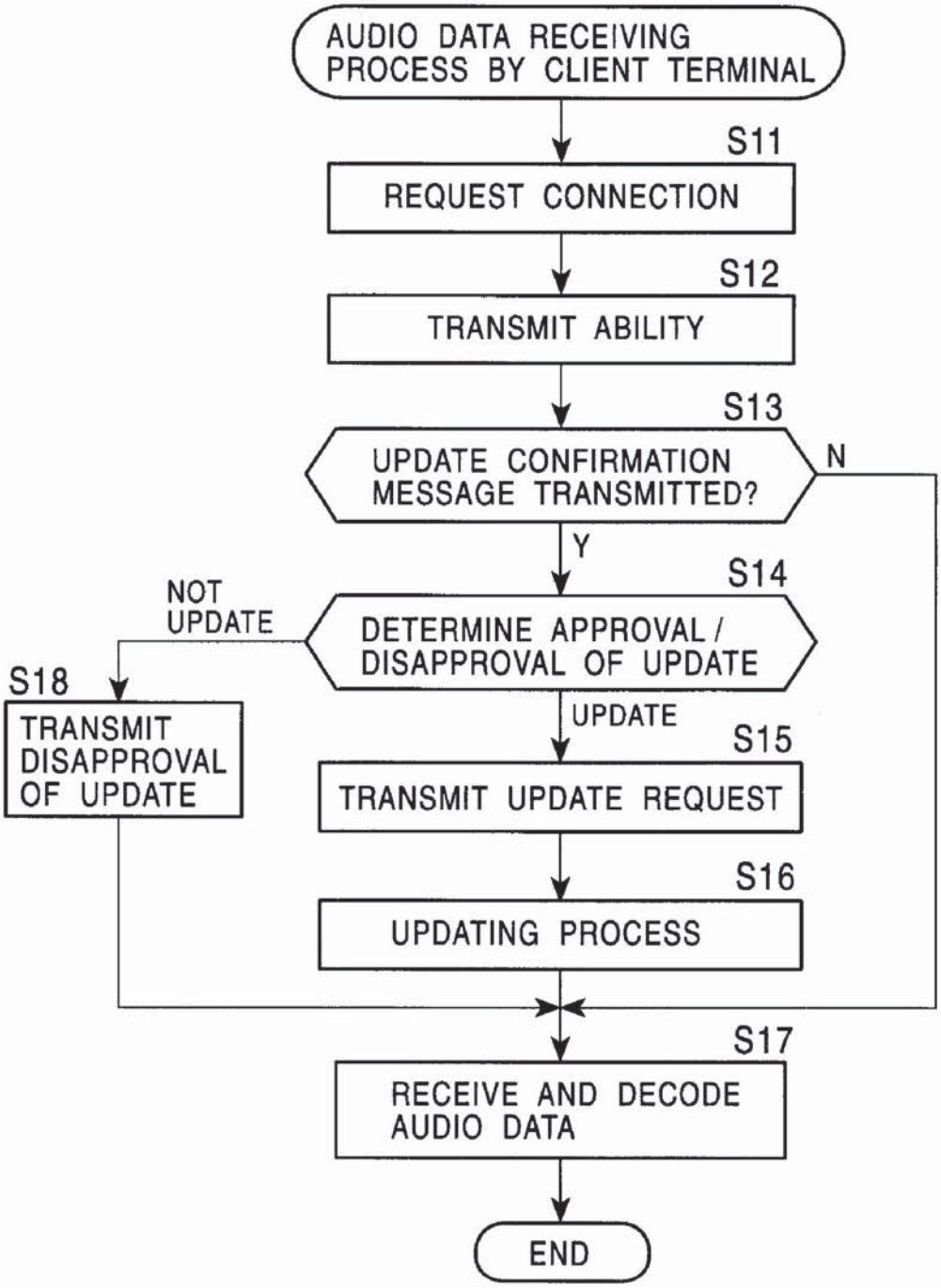
AUDIO DATA RECEIVING PROCESS BY CLIENT TERMINAL
S11
REQUEST CONNECTION
S12
TRANSMIT ABILITY
S13
UPDATE CONFIRMATION MESSAGE TRANSMITTED?
N
Y
S14
NOT UPDATE
DETERMINE APPROVAL / DISAPPROVAL OF UPDATE
S18
TRANSMIT DISAPPROVAL OF UPDATE
UPDATE
S15
TRANSMIT UPDATE REQUEST
S16
UPDATING PROCESS
S17
RECEIVE AND DECODE AUDIO DATA
END

FIG. 13

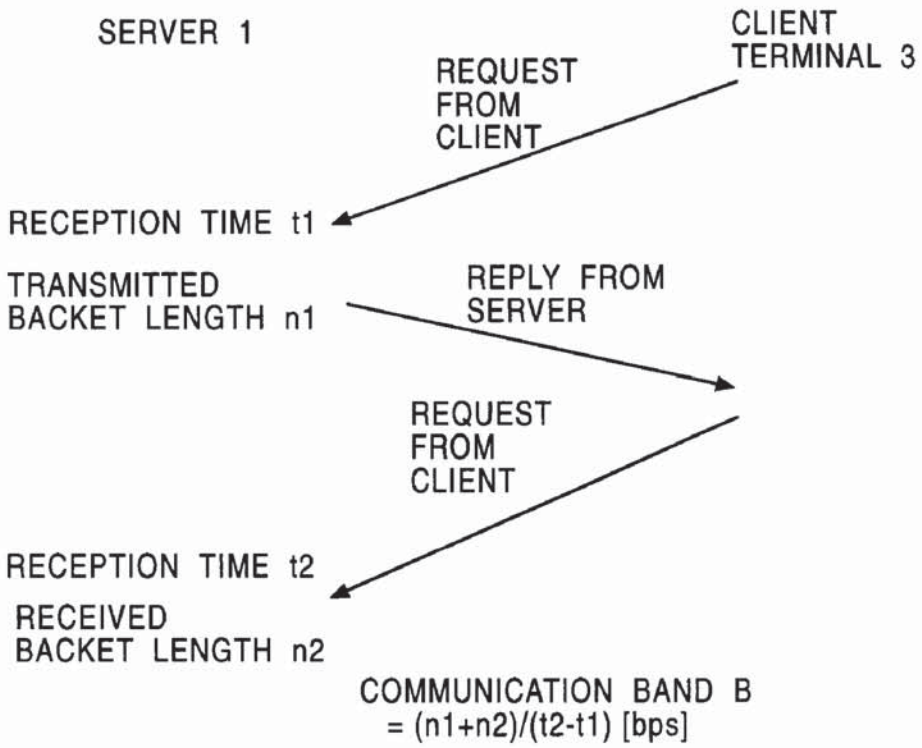
SERVER 1
CLIENT TERMINAL 3
REQUEST FROM CLIENT
RECEPTION TIME t1
TRANSMITTED BACKET LENGTH n1
REPLY FROM SERVER
REQUEST FROM CLIENT
RECEPTION TIME t2
RECEIVED BACKET LENGTH n2
COMMUNICATION BAND B
= (n1+n2)/(t2-t1) [bps]

FIG. 14

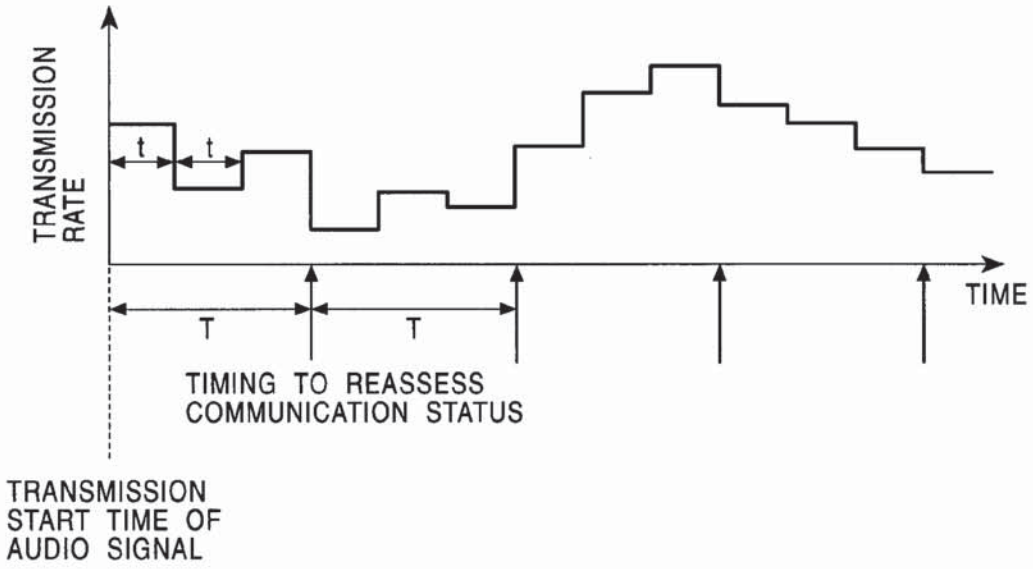
TRANSMISSION RATE
t
t
TIME
T
T
TIMING TO REASSESS COMMUNICATION STATUS
TRANSMISSION START TIME OF AUDIO SIGNAL

FIG. 15

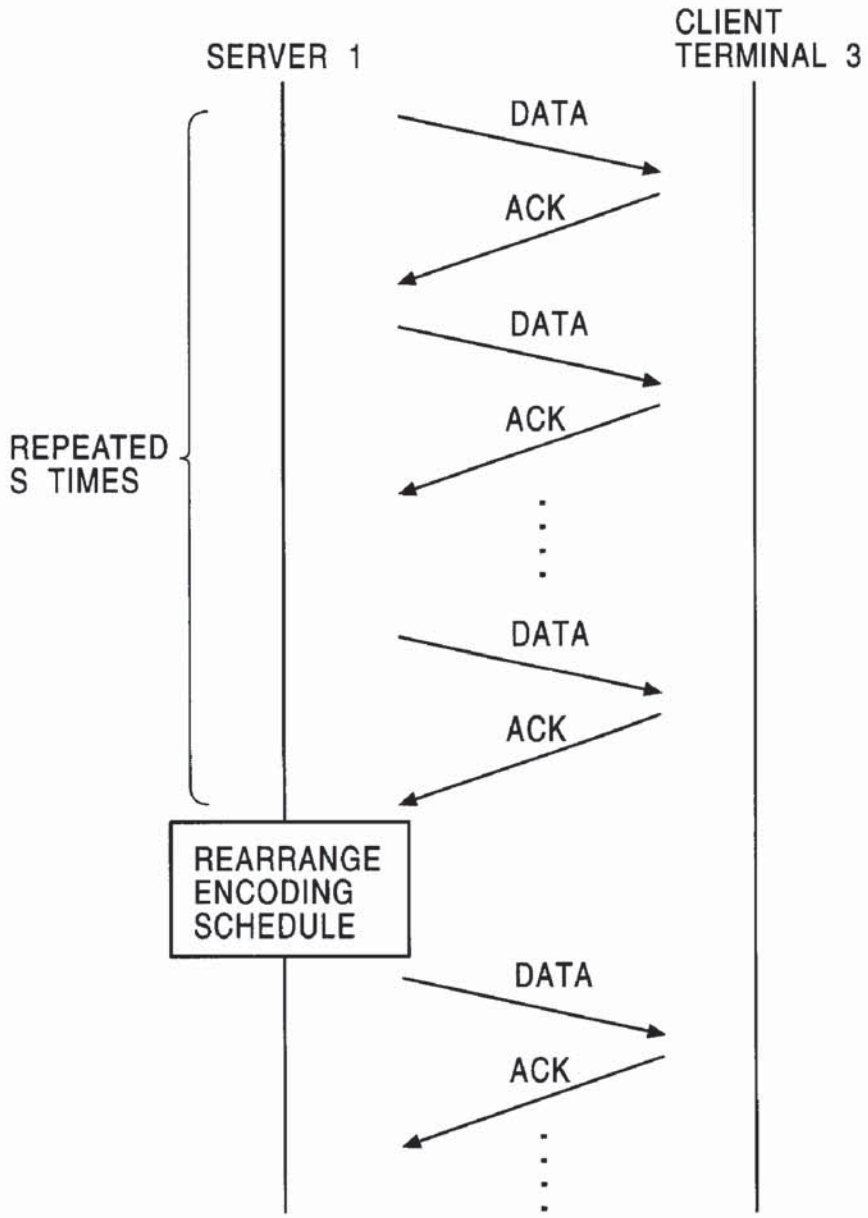
SERVER 1
CLIENT TERMINAL 3
DATA
ACK
DATA
ACK
REPEATED S TIMES
DATA
ACK
REARRANGE ENCODING SCHEDULE
DATA
ACK

FIG. 16

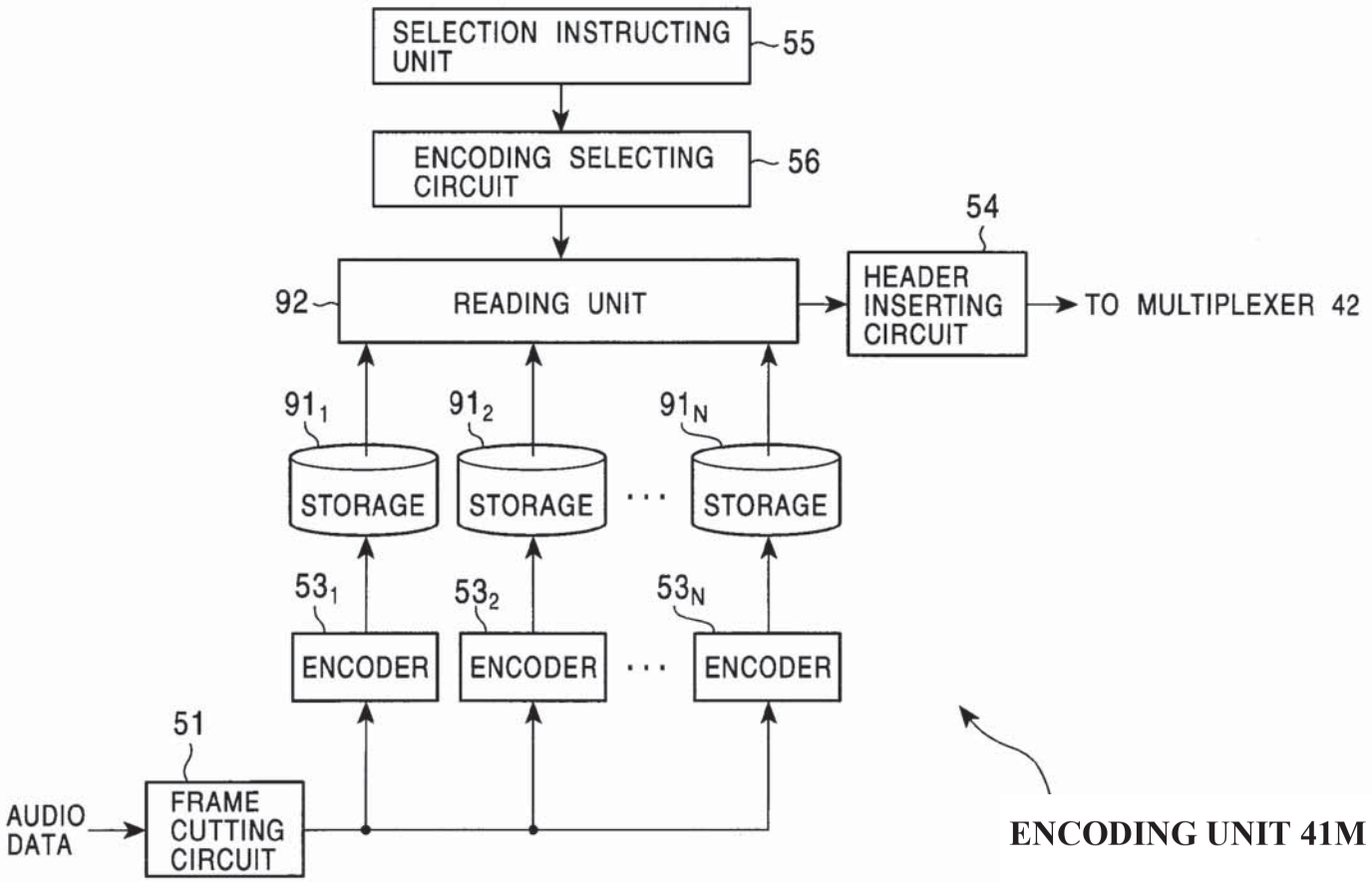
SELECTION INSTRUCTING UNIT
55
ENCODING SELECTING CIRCUIT
56
54
92
READING UNIT
HEADER INSERTING CIRCUIT
TO MULTIPLEXER 42
91₁
91₂
91N
STORAGE
STORAGE
STORAGE
53₁
53₂
53N
ENCODER
ENCODER
ENCODER
51
AUDIO DATA
FRAME CUTTING CIRCUIT
ENCODING UNIT 41M

FIG. 17

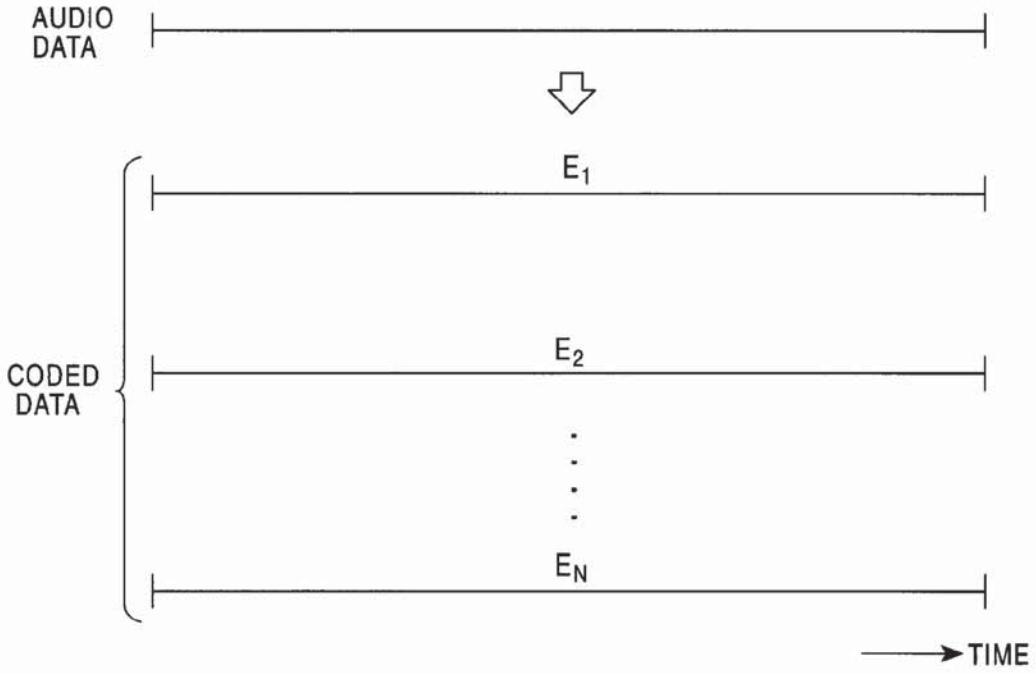

legaltranslations.biz

(Division of Nelles Translations)

20 N. Wacker Drive - Suite 1408 - Chicago, IL 60606 - 312-977-9772 Fax-866-615-8606

Certification

This is to certify that the foregoing translation of the patent document JPH11331305A was made from Japanese to English from the document by a competent translator well acquainted with both languages, and that, to the best of our knowledge and belief, it is a true and complete rendering into English of the selected text.

Date: April 30, 2018

Donald W. Hanley, CEO

Declaration of Mr. Kyung-soo Kye

1. I, am Kyung-soo Kye, residing in Derech Em-Hamoshavot, Israel hereby certify that I am competent to translate from Japanese into English.

2. I hereby certify that I prepared the translation appearing as JPH11331305A and that it is, to the best of my knowledge and belief, a true and accurate English translation of JPH11331305A.
3. I declare under penalty of perjury that all statements made herein of my own knowledge are true and all statements made on information and belief are believed to be true, and further that these statements were made with the knowledge that willful false statements and the like so made are punishable by fine or imprisonment or both, under Section 1001 of Title 18 of the United States Code.

Executed on: April 13, 2018 Signed: Kye

Mr. Kyung-soo Kye