Trials@uspto.gov
571-272-7822

Paper: 8
Entered: June 11, 2019

UNITED STATES PATENT AND TRADEMARK OFFICE

BEFORE THE PATENT TRIAL AND APPEAL BOARD

3SHAPE A/S and 3SHAPE INC.,
Petitioner,

v.

ALIGN TECHNOLOGY, INC.,
Patent Owner.

Case IPR2019-00163
Patent 9,101,433 B2

Before BRIAN J. MCNAMARA, NEIL T. POWELL, and ELIZABETH M. ROESEL, *Administrative Patent Judges*.

ROESEL, *Administrative Patent Judge*.

DECISION
Instituting *Inter Partes* Review
35 U.S.C. § 314

3Shape A/S and 3Shape Inc. ("Petitioner") filed a Petition (Paper 1, "Pet.") seeking *inter partes* review of claims 12 and 14 ("the challenged claims") of U.S. Patent No. 9,101,433 B2 (Ex. 1001, "the '433 patent"). Align Technology, Inc. ("Patent Owner") filed a Preliminary Response. Paper 7 ("Prelim. Resp.").

We have authority to determine whether to institute an *inter partes* review. 35 U.S.C. § 314; 37 C.F.R. § 42.4(a). An *inter partes* review may not be instituted "unless . . . there is a reasonable likelihood that the petitioner would prevail with respect to at least 1 of the claims challenged in the petition." 35 U.S.C. § 314(a). Applying that standard and considering the arguments and evidence presented in the Petition and Preliminary Response, we institute an *inter partes* review.

The following findings of fact and conclusions of law are not final, but are made for the sole purpose of determining whether Petitioner meets the threshold for initiating review. Any final decision will be based on the full trial record, including any response timely filed by Patent Owner.

I. BACKGROUND

A. Related Matters

Pursuant to 37 C.F.R. § 42.8(b)(2), the parties identify the following matters:

> *Align Technology, Inc. v. 3Shape A/S*, No. 1:17-cv-01649 (D. Del., filed Nov. 14, 2017) ("Delaware litigation"); and
>
> *In the Matter of Certain Intraoral Scanners and Related Hardware and Software*, Inv. No. 337-TA-1091 (U.S. Int'l Trade Comm'n, complaint filed Nov. 14, 2017) ("ITC investigation").

Pet. 2; Paper 5, 1 (Patent Owner's Mandatory Notices).

The parties identify the following *inter partes* review proceedings in which Petitioner challenges patents related to the '433 patent:

Case No. IPR2019-00154, involving U.S. Patent No. 8,363,228 ("the '228 patent);

Case No. IPR2019-00155, involving U.S. Patent No. 8,451,456 ("the '456 patent");

Case No. IPR2019-00156, involving U.S. Patent No. 8,675,207 ("the '207 patent");

Case No. IPR2019-00157, involving the '228 patent;

Case No. IPR2019-00159, involving the '456 patent; and

Case No. IPR2019-00160, involving the '207 patent.

Pet. 2–3; Paper 5, 1–2.

B. Asserted Grounds of Unpatentability

Petitioner challenges claims 12 and 14 of the '433 patent based on the following grounds of unpatentability under 35 U.S.C. § 103: (1) Okamoto[1] in view of Babayoff;[2] and (2) Babayoff in view of Okamoto. Pet. 7.

Petitioner asserts that Babayoff and Okamoto are prior art to the '433 patent under 35 U.S.C. § 102(b). *Id.* at 8. At this stage of the proceeding,

---

[1] Japanese Patent Publication No. 2001-82935, published March 30, 2001, Ex. 1004 ("Okamoto"). Exhibit 1004 includes a Japanese language document, a certified English translation, and two certificates of translation.

[2] PCT Publication No. WO 00/08415, published February 17, 2000, Ex. 1003 ("Babayoff"). According to the front faces of the documents, the '433 patent and Babayoff both identify Noam Babayoff as an inventor, and both were originally assigned to Cadent Ltd. Babayoff is incorporated by reference in the '433 patent. Ex. 1001, 1:53–55, 14:60–62, 25:32–34.

Patent Owner does not contest the prior art status of Petitioner's asserted references.

Petitioner supports its challenges with a Declaration of Sohail Dianat, Ph.D. Ex. 1024 ("Dianat Declaration").

C. The '433 Patent (Ex. 1001)

The title of the '433 patent is "Method and apparatus for colour imaging a three-dimensional structure." Ex. 1001, (54). The patent discloses a device for determining the surface topology and associated color of a three-dimensional structure, such as a teeth segment. *Id.* at (57), 2:56–62. The resulting data can be used for design and manufacture of a dental prosthesis, such as a crown, bridge, restoration, or filling. *Id.* at 2:62–66. The device includes a scanner for providing depth data and a color imager for providing color data. *Id.* at (57), 4:66–5:8. A processor combines the color data and depth data to provide a three-dimensional color virtual model of the surface of the structure. *Id.* at (57), 5:28–30.

Figure 1 of the '433 patent is reproduced below:

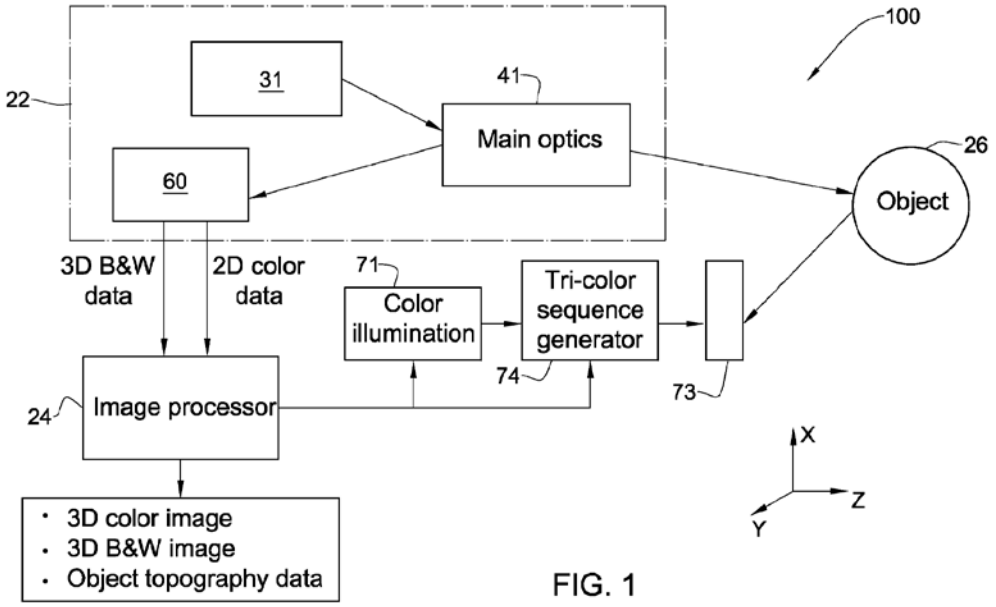

FIG. 1

Figure 1 is a block diagram illustrating the relationship among various elements of the imaging device according to the '433 patent. Ex. 1001, 12:33–34, 13:10–13. As shown in Figure 1, device 100 includes optical device 22, which in turn includes main illumination source 31, main optics 41, and detection optics 60, which together provide a three-dimensional ("3D") numerical entity comprising the surface coordinates of object 26. *Id.* at 13:14–28, Fig. 1. Device 100 also includes tri-color light sources 71, tri-color sequence generator 74, and delivery optics 73, which together illuminate object 26 with suitable colors, typically green, red and blue, allowing a two-dimensional ("2D") color image of object 26 to be captured by detection optics 60. *Id.* at 13:29–34, 16:61–67. Device 100 further includes processor 24, which aligns the 2D color image with the 3D entity and maps color values to the 3D entity at aligned X-Y points. *Id.* at 13:41–44, 14:46–55, Fig. 1. According to the '433 patent, "[s]uch alignment is straightforward because both the 3D data and the 2D color data are referenced to the same X-Y frame of reference." *Id.* at 13:44–46; *see also id.* at 4:41–43 ("the present invention provides a relatively simple and effective way for mapping 2D color information onto a 3D surface model").

The '433 patent describes the mapping procedure as follows:

> [E]ach X-Y point on the 2D image substantially corresponds to a similar point on the 3D scan having the same relative X-Y values. Accordingly, the same point of the structure being scanned has substantially the same X-Y coordinates in both the 2D image and the 3D scan, and thus the color value at each X, Y coordinate of the 2D color scan may be mapped directly to the spatial coordinates in the 3D scan having the same X, Y coordinates wherein to create a numerical entity I representing the color and surface topology of the structure being scanned.

Ex. 1001, at 4:15–24. A more detailed description of the mapping procedure is provided with reference to Figures 2A–2C. *Id.* at 13:46–14:16. According to the ’433 patent, the 3D numerical entity E comprises an array of (X, Y, Z) points obtained by determining depth Z-values for a grid of X-Y points. *Id.* at 13:47–51, Fig. 2A. The 2D color image corresponds to another numerical entity N comprised of the location and color value of each pixel forming this image, (X', Y', C). *Id.* at 13:63–66, Fig. 2B.

The ’433 patent discloses that both the 3D entity E and the 2D color entity N are obtained using the same detection optics 60 at substantially the same relative spatial disposition between detection optics 60 and object 26. Ex. 1001, 13:54–59; *see also id.* at 4:6–8 (3D scan and 2D color image are taken “at substantially the same angle and orientation”). According to the ’433 patent, the X'-Y' coordinates of the pixels of the entity N are on a plane substantially parallel to the X-Y plane of the entity E, and the two sets of coordinates represent substantially the same part of object 26. *Id.* at 13:66–14:3; 14:9–11; *see also id.* at 4:9–13 (3D scan and 2D color image have “substantially parallel” X-Y planes and comprise “substantially the same portion of the structure”).

The ’433 patent explains that the optical information for creating both of these entities is obtained almost simultaneously so there is insufficient time for significant relative movement between the image plane of detection optics 60 and object 26 to occur between the two scans. Ex. 1001, 14:3–9; *see also id.* at 4:2–6 (3D scan and 2D color image are obtained “within a short time interval”). The ’433 patent discloses that the color value C of each pixel of entity N can be mapped to the data point of entity E having X-Y coordinates that are the same as the X'-Y' coordinates of the pixel, thereby

creating another numerical entity I comprising surface coordinate and color data, (X, Y, Z, C). *Id.* at 14:11–16, Fig. 2C.

Figures 4A and 4B of the '433 patent are reproduced below:

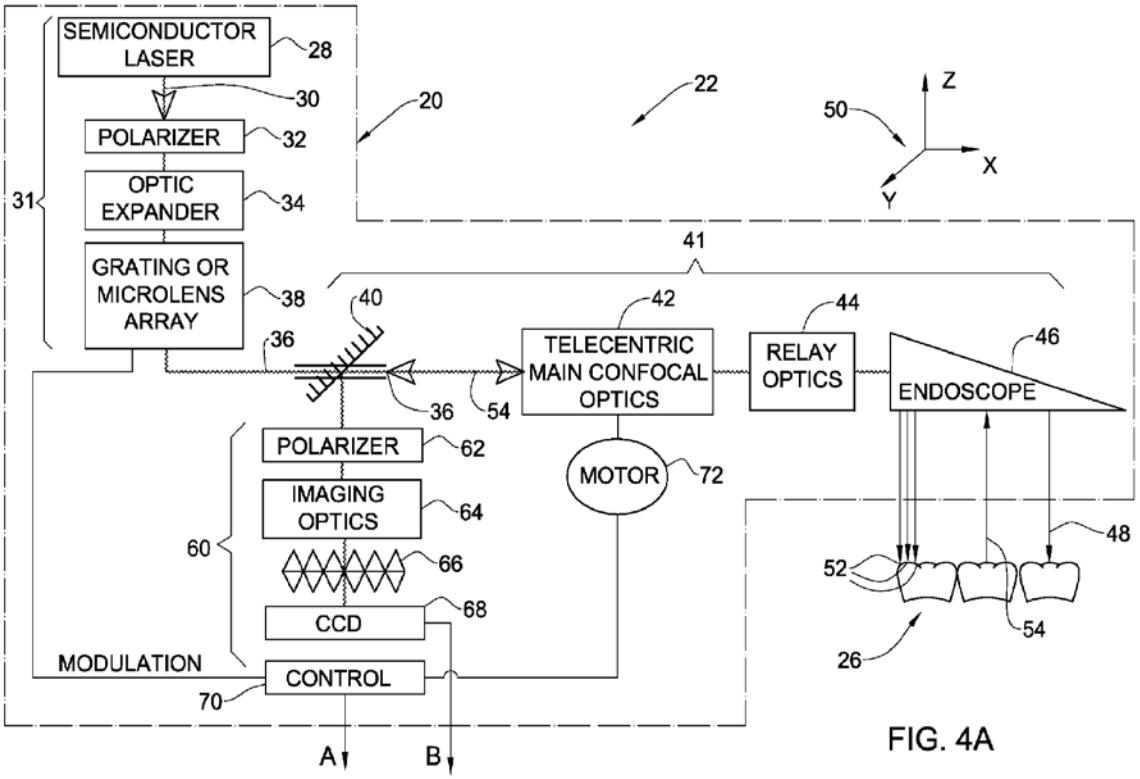

FIG. 4A

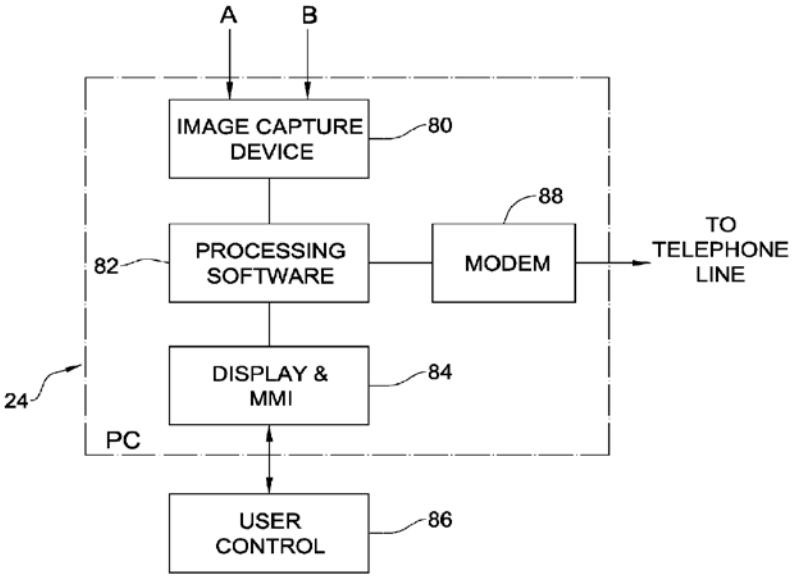

FIG. 4B

Figures 4A and 4B are block diagrams illustrating system 20 for confocal imaging of a 3D structure and providing a 3D monochrome entity. Ex. 1001, 12:42–44, 14:58–60. As shown in Figures 4A and 4B, system 20 comprises optical device 22 coupled to processor 24. *Id.* at 14:65–66. Optical device 22 comprises main illumination source 31, main optics 41, detection optics 60, control module 70, and motor 72. *Id.* at 14:56–58, 16:24–26, Fig. 4A. Main illumination source 31 includes semiconductor laser unit 28, polarizer 32, optic expander 34, and module 38, e.g., a grating or micro lens array. *Id.* at 14:66–15:7, Fig. 4A. Main optics 41 includes punctured mirror 40, confocal optics 42, relay optics 44, and endoscope 46. *Id.* at 15:12–13, 15:31–33, 15:66, Fig. 4A. Detection optics 60 comprises polarizer 62, imaging optic 64, array of pinholes 66, and charge coupled device ("CCD") 68. *Id.* at 16:11–18, 16:60, Fig. 4A. Processor 24 includes image capturing module 80, a central processing unit ("CPU") with processing software 82, and display 84. *Id.* at 16:19–20, 16:39, 16:49–50, 17:5, Fig. 4B. Processor 24 is connected to user control module 86, typically a computer keyboard. *Id.* at 16:50–52, Fig. 4B.

According to the '433 patent, light from laser unit 28 travels as light beam 30, incident light beams 36, and incident light beams 48 and impinges on teeth segment 26 as light spots 52 on the surface of the teeth. Ex. 1001, 14:66–15:9, 15:45–15:55, Fig. 4A. Light scattered from the light spots includes returned light beams 54 travelling in the opposite direction from incident light beams 36. *Id.* at 16:4–8. Returned light beams 54 are received by detection optics 60 where CCD 68 measures the light intensity at each pixel. *Id.* at 16:8–18. Light intensity data from CCD 68 is grabbed by image capturing module 80 and analyzed by CPU 82 to determine the

relative intensity at each pixel over a range of focal planes of optics 42, 44. *Id.* at 16:19–23, 16:33–38. Before each light pulse from laser 18, the focal plane is changed by displacing optical element 42 along the Z-axis by the action of motor 72 under the control of module 70. *Id.* at 16:24–33. The relative position of each light spot along the Z-axis is determined from the maximal light intensity or maximum displacement derivative of the light intensity for each pixel. *Id.* at 15:55–16:3, 16:41–47; *see also id.* at 3:3–67 (describing confocal focusing method). In this manner, data representative of the three-dimensional structure of the surface of the teeth segment is obtained and displayed on display 84. *Id.* at 16:47–50.

The '433 patent discloses four techniques for obtaining a 2D color image of object 26. Ex. 1001, 16:53–61, 23:64–67, 24:45–25:2. These techniques involve illuminating object 26 either sequentially with red, green, and blue light or with white light and using either a monochromatic CCD or a color CCD to capture the light reflected from the object. *Id.*; *see also id.* at 13:56–63 (describing method for obtaining 2D color image of object 26). According to a first technique, processing software 82 combines the red, green, and blue images to provide a 2D color image comprising an array of data points having location (X, Y) and color (C) information for each pixel of the 2D color image. *Id.* at 17:5–8.

The '433 patent discloses and illustrates seven embodiments of device 100, each of which has a different configuration for obtaining a 2D color image. Ex. 1001, 12:45–13:6, 17:9–24:44, Figs. 5A–13. According to a fourth embodiment, color illumination of object 26 is provided within confocal optics 42. *Id.* at 19:35–42, Fig. 8. The illumination sources may be a laser and two or more light-emitting diodes (LEDs) and may be tri-color,

i.e., red, green, and blue, and may include intermediate wavelengths, such as aqua and amber. *Id.* at 19:52–54, 19:64–20:19, 20:42–21:3 Fig. 9; *see also id.* at 21:15–18 ("in each cycle the object 26 is separately illuminated in each of the five colors blue, aqua, green, amber, red, in quick succession, and each time a monochromatic image is obtained"). In one mode of operation, the color light sources are moved in the z-direction, and a set of monochromic images—red, green, blue, and intermediate wavelengths—is taken at each z-position. *Id.* at 22:1–14. Regarding this mode of operation, the '433 patent discloses:

> Thus, a plurality of color images can be obtained, each based on a different z-position, so that each illumination wavelength is used to illuminate in focus a different part (depth) of the object 26. Advantageously, suitable algorithms may be used to form a composite color image of the set of color images associated with a particular z-scan of the object 26 to provide even more precise and accurate color image, than can then be combined with the depth data.

Id. at 22:19–27.

D. Illustrative Claim

The '433 patent includes 20 claims. Petitioner challenges claims 12 and 14. Claim 12 is reproduced below, with bracketed identifiers added to correspond with Petitioner's identification of claim elements:

> 1. [Preamble] A system for determining surface topology and associated color of at least a portion of a three-dimensional structure, the system comprising:
>
> [1.1] an apparatus comprising an image gathering member to generate depth data of the structure portion corresponding to a two-dimensional reference array substantially orthogonal to a depth direction; and

> [1.2] one or more processors configured to cause the system to at least:
>
> > [1.3] receive, from the apparatus, the depth data of the structure portion corresponding to the two-dimensional reference array substantially orthogonal to a depth direction;
> >
> > [1.4] receive, from the apparatus, two-dimensional image data of the structure portion associated with the two-dimensional reference array for each of a plurality of focal lengths relative to the image gathering member; and
> >
> > [1.5] selectively map the image data to the depth data for the two-dimensional reference array based on the plurality of focal lengths and the depth data such that the resulting associated color of the structure portion is in focus relative to the structure portion for a plurality of distances in the depth direction.

Ex. 1001, 28:1–23; *see* Pet. 25–45 (headings identify elements of claim 12).

II. DISCUSSION

A. Claim Construction

Because the Petition was filed before November 13, 2018, and the '433 patent has not yet expired, claim terms are to be given their broadest reasonable interpretation in light of the specification. 37 C.F.R. § 42.100(b) (2018).[3] Under that standard, we generally give claim terms their ordinary and customary meaning, as would be understood by a person of ordinary skill in the art, in the context of the entire patent disclosure. *In re Translogic Tech., Inc.*, 504 F.3d 1249, 1257 (Fed. Cir. 2007).

---

[3] A recent amendment to this rule does not apply here. *See* Changes to the Claim Construction Standard for Interpreting Claims in Trial Proceedings Before the Patent Trial and Appeal Board, 83 Fed. Reg. 51,340 (Oct. 11, 2018) (amending 37 C.F.R. § 42.100(b) effective November 13, 2018).

Petitioner proposes constructions for two terms in claim 12, "image gathering member" and "selectively map the image data to the depth data." Pet. 22–24. Consistent with its position in the ITC investigation, Petitioner contends that "image gathering member" should be construed as a means-plus-function ("MPF") term pursuant to 35 U.S.C. § 112 ¶ 6. *Id.* at 22–23. Petitioner adopts its construction of the "selectively map" term from the ITC investigation and also presents Patent Owner's ITC construction. Pet. 23–24. Patent Owner opposes Petitioner's proposed claim constructions, but offers no constructions of its own at this stage of the proceeding. Prelim. Resp. 10–18.

Neither party relies exclusively on its claim construction position in the context of arguing patentability or unpatentability of the challenged claims. Petitioner asserts that the challenged claims would have been obvious over the asserted prior art under all proposed constructions. Pet. 23–24. Patent Owner relies on Petitioner's MPF construction for "image gathering member" to argue insufficiency of Petitioner's obviousness contentions. Prelim. Resp. 23–25. Patent Owner's arguments regarding the "selectively map" limitation are based on "the plain and ordinary meaning" of the claim language. *Id.* at 40.

After considering the Petition and the Preliminary Response, we determine that no claim term requires express construction for purposes of this Decision. *See Nidec Motor Corp. v. Zhongshan Broad Ocean Motor Co.*, 868 F.3d 1013, 1017 (Fed. Cir. 2017) ("[W]e need only construe terms 'that are in controversy, and only to the extent necessary to resolve the controversy.'") (quoting *Vivid Techs., Inc. v. Am. Sci. & Eng'g, Inc.*, 200 F.3d 795, 803 (Fed. Cir. 1999)).

B. Principles of Law

A claim is unpatentable under 35 U.S.C. § 103(a) if "the differences between the subject matter sought to be patented and the prior art are such that the subject matter as a whole would have been obvious at the time the invention was made to a person having ordinary skill in the art to which said subject matter pertains." *KSR Int'l Co. v. Teleflex Inc.*, 550 U.S. 398, 406 (2007). The question of obviousness is resolved on the basis of underlying factual determinations, including (1) the scope and content of the prior art; (2) any differences between the claimed subject matter and the prior art; (3) the level of skill in the art; and, when introduced, (4) objective evidence of nonobviousness. *Graham v. John Deere Co.*, 383 U.S. 1, 17–18 (1966). The parties' contentions regarding these factors are addressed in Sections C, D, and E below.

C. Level of Ordinary Skill in the Art

Relying on the Dianat Declaration, Petitioner asserts that a person of ordinary skill in the art ("POSITA") would have at least (1) a bachelor's degree in electrical engineering, optical engineering, or physics (or equivalent course work) and three to four years of work experience in the areas of optical imaging systems and image processing or (2) a master's degree in electrical engineering or physics (or equivalent course work) with a focus in the area of optical imaging systems and image processing. Pet. 14 (citing Ex. 1024 ¶ 27). Patent Owner does not dispute Petitioner's definition of a POSITA.

For purposes of determining whether to institute review, we accept Petitioner's definition of a POSITA.

D. Prior Art References

Below we provide an overview of the prior art references relied upon by Petitioner.

1. Okamoto (Ex. 1004)

Okamoto discloses a three-dimensional shape measurement device that measures both the three-dimensional shape of a target object and the color of the target object and displays the three-dimensional shape with the color close to the actual color of the target object. Ex. 1004 ¶¶ 1, 8, 9. Okamoto's measurement device provides both "height information" and "color information" for the target object. *Id.* ¶¶ 8, 9.

Figure 1 of Okamoto is reproduced below.

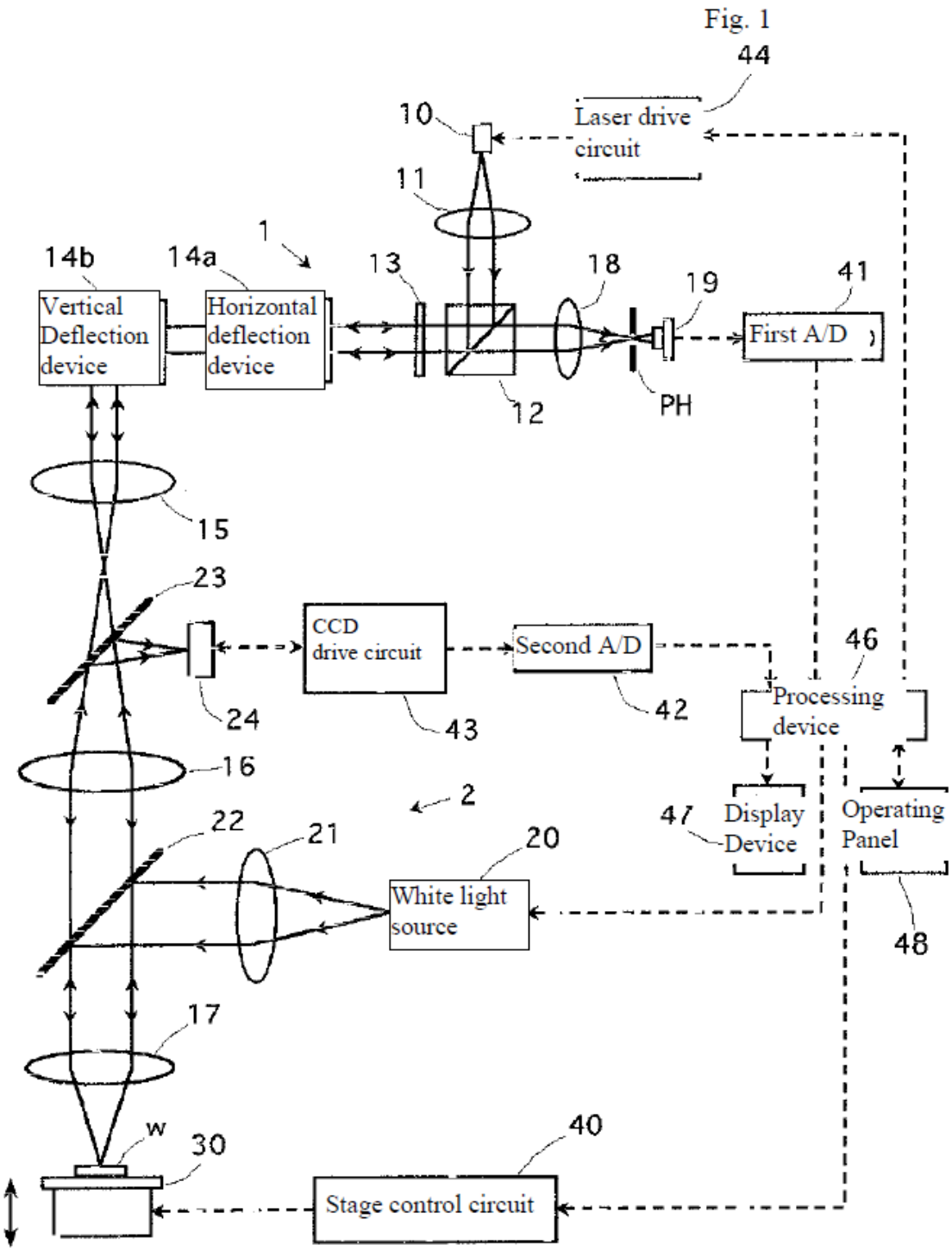

Okamoto Figure 1 is a block diagram showing the schematic configuration of a confocal microscope, i.e., a three-dimensional measurement device.

Ex. 1004 ¶ 15, p. 8 (brief description of the drawings). Okamoto's confocal microscope includes "confocal optical system 1 to obtain the 3-dimensional surface shape information that includes sample height and non-confocal optical system 2 to obtain the sample color image." *Id.* ¶ 15.

Okamoto describes confocal optical system 1. Ex. 1004 ¶¶ 16–27. According to Okamoto, the confocal optical system obtains information concerning the three-dimensional surface profile, including information regarding the height of the sample. *Id.* ¶ 21. More specifically, the distribution of surface heights of the sample in the XY plane is obtained. *Id.* ¶ 24. Okamoto discloses that the height distribution (surface profile) of the sample can be displayed three-dimensionally. *Id.* ¶ 25.

Figure 3 of Okamoto is reproduced below.

Fig. 3

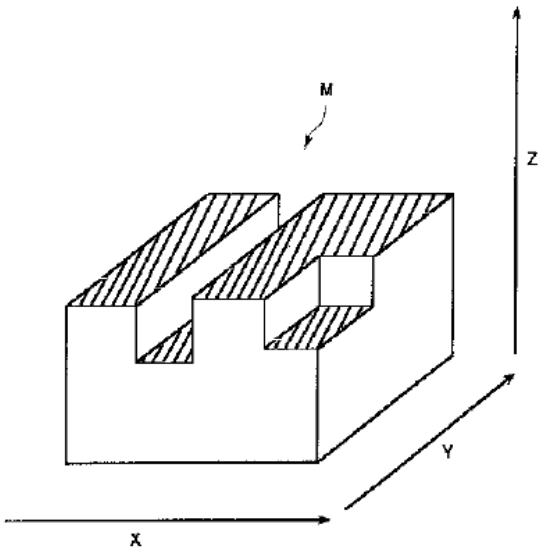

Okamoto Figure 3 shows an example of a three-dimensional display of a simple solid model M. Ex. 1004 ¶ 26, p. 8 (brief description of the drawings).

Okamoto describes non-confocal optical system 2. Ex. 1004 ¶¶ 28–30. The non-confocal system uses a color CCD as a color information capture sensor. *Id.* ¶ 28. According to Okamoto, the CCD "is provided at a position that is conjugate or nearly conjugate to the pinhole . . . of the confocal optical system 1." *Id.* ¶ 30. The non-confocal system obtains a color image that is "converted to digital values" and displayed on a screen "as an enlarged color image for observing the sample." *Id.*

Okamoto describes how the information from the confocal and non-confocal optical systems are combined and displayed. Ex. 1004 ¶¶ 31–37. Okamoto discloses:

> Color images obtained with the non-confocal optical system 2 are combined in a three-dimensional display of the surface profile of the sample obtained by the confocal optical system 1 described above, and color three-dimensional display is carried out. As a result, portions represented by hatching viewed from above in the Z-axis direction are colored with the colors of a color image in the display model shown in Fig. 3. Picture elements of the hatched portions are imaged in the XY plane and are associated with picture elements of the color image.

Ex. 1004 ¶ 31. According to Okamoto, processing for carrying out color three-dimensional display is executed "in accordance with software by a microprocessor contained in processing device 46," which is indicated in Figure 1 and shown in more detail in Figure 4. *Id.* ¶¶ 24, 33, 34.

Figure 4 of Okamoto is reproduced below.

Fig. 4

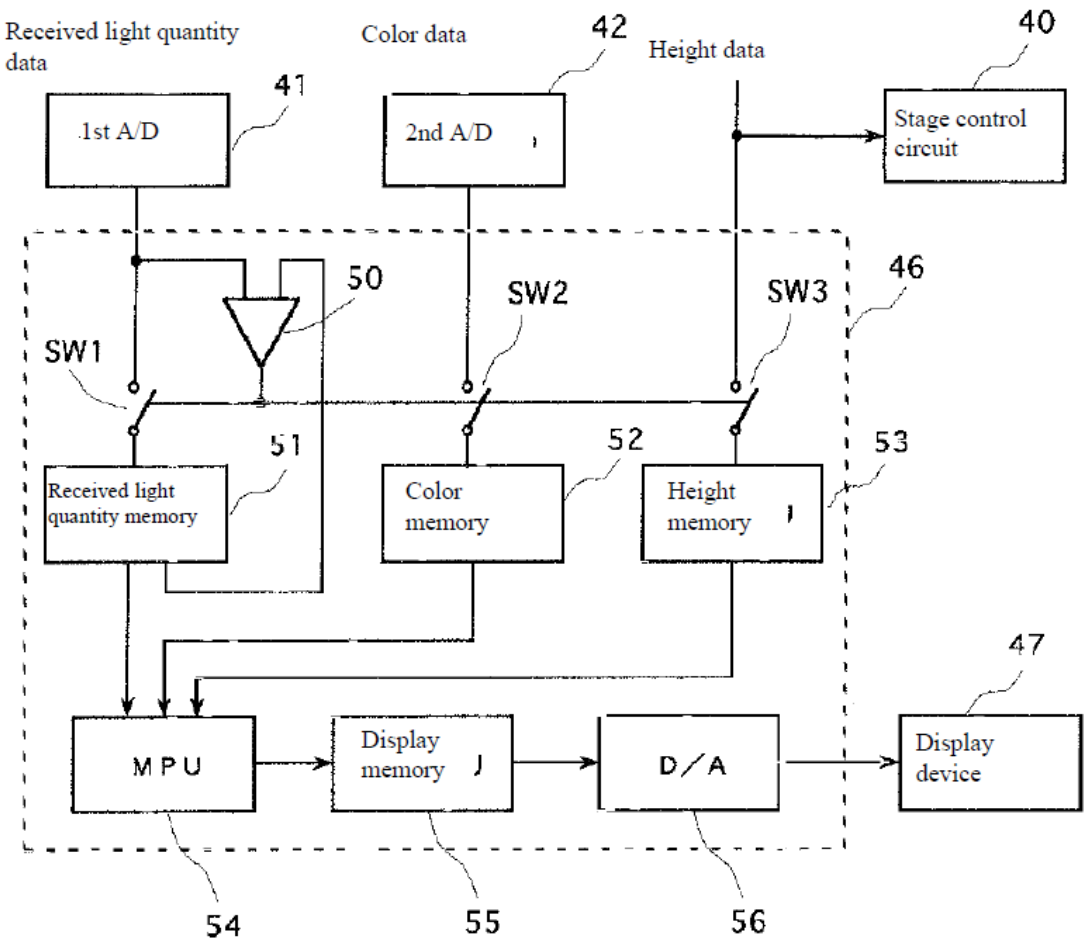

Okamoto Figure 4 is a block diagram showing a configuration that focuses on the processing device 46 for carrying out color three-dimensional display. Ex. 1004 ¶ 34, p. 8 (brief description of the drawings). Okamoto discloses that color data and height data for the corresponding picture elements are stored in color memory 52 and height memory 53. *Id.* ¶ 35. According to Okamoto, the color data is input from the color CCD 24 to processing device 46. *Id.* Microprocessor 54 then uses the stored color data and the stored height data to generate color three-dimensional display data of the surface profile of the sample, which is input to display memory 55 and

provided to display device 47. *Id.* ¶ 36. Okamoto discloses that "[t]he color three-dimensional display data . . . is generated from the height data and color data for each picture element in the XY plane." *Id.* ¶ 37.

Figure 5 of Okamoto is reproduced below.

Fig. 5

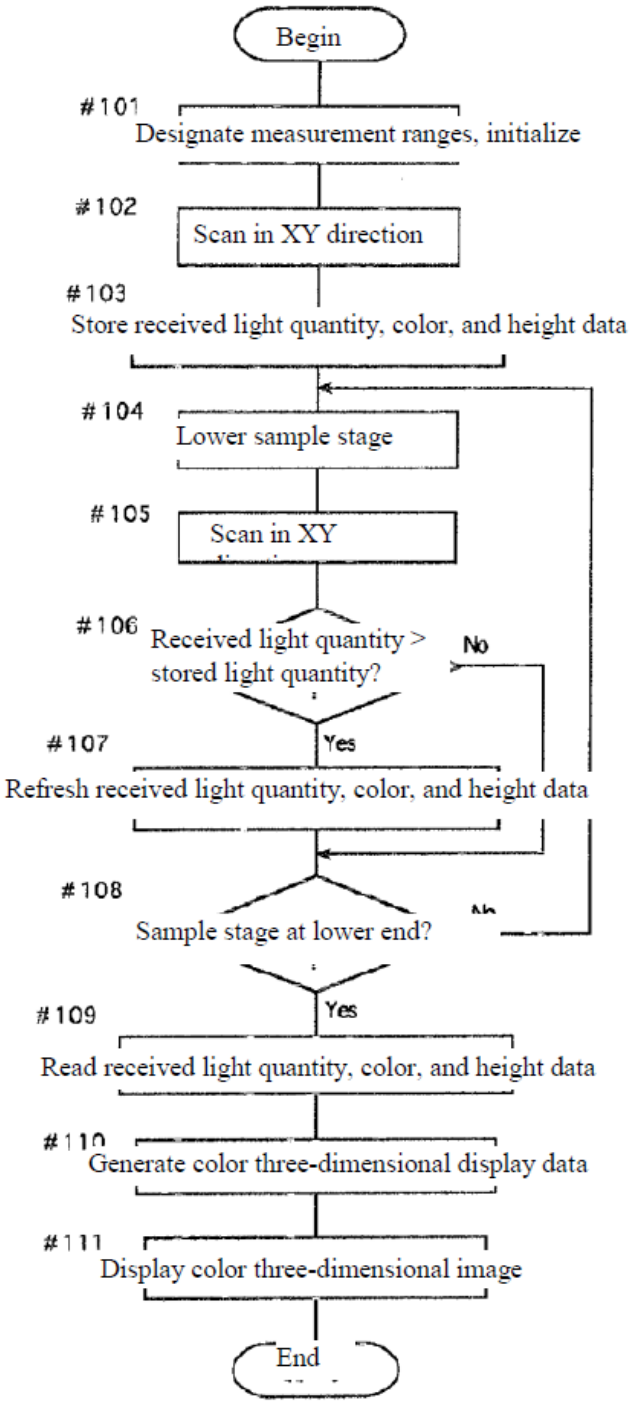

Okamoto Figure 5 is a flow chart showing processing for color three-dimensional display. Ex. 1004 ¶ 38, p. 8 (brief description of the drawings). In step 101, the XY scanning range and the Z scanning range are designated. *Id.* ¶ 38. In step 102, laser light scans the surface of the sample in the XY direction. *Id.* ¶ 39. In step 103, the received light quantity data, the color data, and the height data for each picture element are stored. *Id.* In steps 104 and 105, the sample stage is lowered one step, and the sample is scanned again. *Id.* ¶ 40. In steps 106 and 107, the new light received quantity is compared with the stored light quantity data, and if the new light received quantity is greater than the stored light quantity, then the stored data for the light quantity, color, and height are refreshed. *Id.* In step 108, the Z direction position of the sample stage is compared with the lower end of the designated measurement range. *Id.* ¶ 41. Steps 104 to 108 are repeated until the sample stage reaches the end of the measurement range. At that point, the maximum received light quantity, color, and height data for each picture element in the XY scanning range are stored. *Id.* ¶ 42. In steps 109 to 111, the stored data are read, color three-dimensional display data of the surface profile of the sample are generated, and a color three-dimensional image is displayed. *Id.*

According to Okamoto, the effect of the disclosed three-dimensional measurement device is that "three-dimensional display of the surface profile is colored with colors that are close to the actual colors of the object to be measured." Ex. 1004 ¶ 46.

2. Babayoff (Ex. 1003)

Babayoff discloses a method and an apparatus for imaging of a three-dimensional structure by confocal focusing an array of light beams.

Ex. 1003, 1 (title). According to Babayoff, the method is particularly useful for surveying of teeth in the oral cavity of a patient and imaging of a three-dimensional topology of a teeth segment. *Id.* at 1:2–4, 1:8–9, 2:25–27.

Babayoff discloses an apparatus for determining surface topology of a portion of a three-dimensional structure. *Id.* at 3:23–4:14. The apparatus comprises a probing member, an illumination unit, a light focusing optics defining one or more focal planes, a translation mechanism for displacing the focal plane, a detector, and a processor. *Id.* According to Babayoff, the probing member, illumination unit, focusing optics, translation mechanism, and detector are preferably included together in a hand-held device. *Id.* at 4:15–17.

Babayoff is incorporated by reference in the ’433 patent. Ex. 1001, 14:61–63. In addition, large portions of Babayoff are incorporated with little modification into the disclosure of the ’433 patent. For example, Babayoff’s disclosure of a method for determining the surface topology of a portion of a three-dimensional structure is essentially the same as the ’433 patent’s description of a confocal focusing method. *Compare* Ex. 1003, 3:3–22, 4:18-5:21, *with* Ex. 1001, 3:3–62. Babayoff’s summary of an apparatus for determining surface topology of a portion of a three-dimensional structure is essentially the same as the ’433 patent’s summary of a scanning apparatus that uses confocal imaging techniques. *Compare* Ex. 1003, 3:23–4:14, *with* Ex. 1001, 5:30–56. Babayoff’s detailed description and illustration of an apparatus for determining the three-dimensional structure of a teeth segment are essentially the same as the ’433 patent’s detailed description and illustration of a system for confocal imaging of a three-dimensional structure. *Compare* Ex. 1003, 8:10–12, 8:24–12:15, Figs. 1A, 1B, *with*

Ex. 1001, 14:58–60, 14:65–16:52, 25:16–29, Figs. 4A, 4B. Babayoff and the '433 patent contain essentially the same detailed description and illustration of a probing member. *Compare* Ex. 1003, 12:21–13:5, Figs. 2A, 2B, *with* Ex. 1001, 17:12–26, Figs. 5A, 5B.

E. Petitioner's Obviousness Grounds

Petitioner contends that claims 12 and 14 of the '433 patent are unpatentable as obvious under 35 U.S.C. § 103(a) in view of Okamoto and Babayoff. Pet. 25–75. Patent Owner opposes. Prelim. Resp. 18–62. We address the parties' arguments below.

1. Petitioner's Contentions

Petitioner presents two obviousness grounds: (1) Okamoto in view of Babayoff, and (2) Babayoff in view of Okamoto. For each ground, Petitioner provides an element-by-element analysis, identifying disclosures in Okamoto and/or Babayoff that Petitioner relies upon to teach each claim element. Pet. 25–50, 58–69. Petitioner then provides an explanation of why the claims would have been obvious. *Id.* at 50–58, 69–75. In these sections, Petitioner identifies differences between the challenged claims and the asserted prior art references (*id.* at 51, 54, 69) and provides its contentions regarding motivation to combine and a reasonable expectation of success (*id.* at 52–53, 55–58, 70–74).

In Ground 1, Petitioner contends that Okamoto teaches all elements of claims 12 and 14. Pet. 25–50; *see also* Prelim. Resp. 1 (summarizing Petitioner's contentions). For claim element 12.1, Petitioner contends that Okamoto discloses an "image gathering member" under Patent Owner's ITC

claim construction (*id.* at 30)[4] and that Babayoff discloses an "image gathering member" under both parties' claim constructions (*id.* at 30–32). For claim element 12.5, Petitioner contends that Okamoto teaches selectively mapping the image data to the depth data under both parties' claim constructions. *Id.* at 45–48. Petitioner contends that it would have been obvious to modify Okamoto's system and process to use focal length values instead of sample height values in view of Okamoto's express disclosure of these alternatives. *Id.* at 51–53 (citing Ex. 1004 ¶ 19).

Petitioner contends that it would have been obvious to modify Okamoto's confocal optical system to employ elements of Babayoff's confocal optical system that satisfy Petitioner's MPF construction for "image gathering member." *Id.* at 53–55. Among other alleged motivations, Petitioner contends that a "POSITA would have been motivated to modify Okamoto to utilize the confocal system of Babayoff, because doing so would allow for scanning from two or more angular locations around the structure, not merely from the Z axis direction as in Okamoto's confocal system." *Id.* at 57.

In Ground 2, Petitioner contends that Babayoff teaches claim elements 12.1, 12.2, and 12.3 and the limitation of claim 14. Pet. 60–67, 69. Petitioner relies on a combination of Babayoff and Okamoto for the claim preamble and claim elements 12.4 and 12.5. *Id.* at 59, 67–69. Petitioner acknowledges that Babayoff does not disclose a system for selectively

---

[4] As discussed in Section II.A. above, Petitioner addresses the claim constructions proposed by Patent Owner in the ITC investigation. In the Preliminary Response, Patent Owner does not propose any express claim constructions for purposes of this proceeding.

mapping color image data to depth data. *Id.* at 69. For the aspects of claim 12 relating to color and two-dimensional image data, Petitioner relies on Okamoto. *Id.*; *see also id.* at 59, 67–69 (addressing preamble, two-dimensional image data, and selective mapping limitations of claim 12).

Petitioner contends that a POSITA would have been motivated to modify Babayoff to include a color imaging system and a processor configured to cause the system to selectively map the color data to the depth data, as taught by Okamoto. Pet. 70–72. As motivation, Petitioner identifies a known desire to match a patient's tooth color when preparing dental prostheses. *Id.* (citing Babayoff and Okamoto, as well as Ex. 1007,[5] 1:32–38, 2:18–20; Ex. 1008,[6] 1:10–19, 2:29–30; Ex. 1024 ¶¶ 182–186; Ex. 1055,[7] 4:26–27).

Petitioner contends a "POSITA would have had a reasonable expectation of successfully modifying Babayoff to selectively map color data with depth data" because "Okamoto already disclosed a 3D measurement device that obtains and selectively maps color data to depth data that could be readily deployed with Babayoff's confocal optical system." *Id.* at 72 (citing Ex. 1024 ¶ 187); *see also id.* at 73–74 (asserting that "techniques for 'combin[ing] 3D scan data with 2D color photographs to create a 3D model of the teeth' were conventional and routine," citing Ex. 1006 ¶ 80, Fig. 4; Ex. 1024 ¶ 189).

---

[5] U.S. Patent No. 6,575,751, issued June 10, 2003.

[6] U.S Patent No. 5,766,006, issued June 16, 1998.

[7] U.S. Patent No. 7,099,732, filed Sept. 2, 2003, issued August 29, 2006.

2. Patent Owner's Arguments

Patent Owner presents its opposition to Petitioner's challenges in two main parts. First, Patent Owner argues that the Petition fails to meet minimum statutory and rule-based requirements. Prelim. Resp. 18–35. Second, Patent Owner challenges Petitioner's contentions regarding the teachings of Okamoto and motivation to combine Babayoff and Okamoto and a reasonable expectation of success. *Id.* at 36-57, 60–62. We address these arguments below.

Patent Owner refers to claim element 1.5 as the "Selectively Map Feature" (Prelim. Resp. 9) and argues that Petitioner fails to make clear what it relies on in the art to teach or suggest this feature (*id.* at 18–23). We disagree. After considering Patent Owner's arguments, we are persuaded that the Petition identifies with sufficient particularity where Petitioner contends the Selectively Map Feature is found in Okamoto. Pet. 45–48. As Patent Owner acknowledges, Petitioner contends that the Selectively Map Feature is disclosed by what Patent Owner calls the "Seeks and Stores Clause" of Okamoto. Prelim. Resp. 40 (citing Pet. 45–46).

Patent Owner argues that Petitioner ignores a portion of its MPF construction for "image gathering member" and fails properly to apply its MPF construction to the asserted art. Prelim. Resp. 23–25. At the same time, however, Patent Owner argues that Petitioner's MPF construction is incorrect. *Id.* at 10–15. As discussed above, Petitioner contends that the prior art discloses an "image gathering member" under both parties' ITC claim constructions, including Patent Owner's non-MPF construction. Pet. 23–24, 30–32. Patent Owner does not argue that Petitioner fails to apply Patent Owner's non-MPF claim construction. Petitioner's contention based

on Patent Owner's non-MPF claim construction provides a sufficient basis for institution.

Patent Owner argues that Petitioner improperly relies on art that is not identified within the grounds, namely alleged Applicant Admitted Prior Art ("AAPA")[8] and Pulli.[9] Prelim. Resp. 25–26 (citing 37 C.F.R. § 42.104(b)(2)). We disagree. Petitioner relies on the AAPA and Pulli as evidence that algorithms, software, hardware, and techniques for selectively mapping color data to depth data were well-known and conventional. Pet. 48–49. After considering Patent Owner's arguments, we are persuaded that Petitioner has complied with Rule 42.104(b)(2) by identifying the patents or printed publications relied upon for each ground and that Petitioner's reliance on the AAPA and Pulli is not inconsistent with that rule.

Patent Owner argues that Petitioner "fails to perform a proper second *Graham* factor analysis" and "fails to explicitly state what Babayoff or Okamoto lack before moving onto other art." Prelim. Resp. 26, 28. We disagree. After considering Patent Owner's arguments, we are persuaded that Petitioner identifies sufficiently the differences between the asserted prior art references and the limitations of the challenged claims. Pet. 51, 54, 69 (identifying claim features that are not explicitly disclosed by Okamoto or Babayoff).

Patent Owner argues "Petitioner ignores known objective indicia evidence of nonobviousness Patent Owner presented in a related ITC

---

[8] Petitioner cites column 21, lines 33–43 of the '433 patent as AAPA. Pet. 48–49 (citing Ex. 1001, 21:33–43).

[9] Kari Pulli, *Surface Reconstruction and Display from Range and Color Data* (Dec. 2, 1997), Ex. 1013 ("Pulli").

action." Prelim. Resp. 28. Patent Owner relies on non-binding Board precedent[10] to argue that "all known objective indicia evidence must be considered at the institution stage where (1) petitioner is aware of the objective indicia evidence from having participated in a related ITC action, and (2) that evidence was fully developed in that action." *Id.* at 29 (emphasis omitted). Unlike *Bosch*, however, Petitioner in this case addresses secondary considerations by asserting that "[a]ny purported evidence of secondary considerations that Patent Owner may present in this proceeding would be insufficient to overcome the strong evidence of obviousness." Pet. 75. Also unlike *Bosch*, Patent Owner in this case does not rely on the ITC's initial determination and has not submitted it as an exhibit. Patent Owner does not specify what evidence should have been addressed by Petitioner. Instead, Patent Owner cites its heavily redacted ITC briefs. Prelim. Resp. 29 (citing Exs. 2002, 2007). Briefs are not evidence. Under these circumstances, we determine that secondary considerations are adequately addressed in the Petition.

Patent Owner argues that Petitioner mischaracterizes the alleged AAPA. Prelim. Resp. 32–33 (citing Pet. 48–49). The portion of the Petition criticized by Patent Owner pertains to the Selectively Map Feature of claim 12. Pet. 48–49. Patent Owner argues that Petitioner's characterization of the AAPA is inconsistent with the '433 patent specification. Prelim. Resp. 32–33 (citing Ex. 1001, 21:36–43). According to Patent Owner, "the cited portions of the specification actually state that suitable algorithms that

---

[10] *Robert Bosch Tool Corp. v. SD3, LLC*, IPR2016-01751, slip op. at 22–32 (PTAB March 22, 2017) (Paper 15) ("*Bosch*").

can distinguish between focused and unfocused areas of a set of images are well known in the art." *Id.* at 33. Even accepting Patent Owner's characterization of the AAPA, we are persuaded that Petitioner's arguments and evidence regarding the Selectively Map Feature provide a sufficient basis on which to institute review for the reasons discussed below.

After considering Patent Owner's arguments (Prelim. Resp. 18–35), we are persuaded that the Petition meets the statutory and rule-based requirements identified by Patent Owner.

Patent Owner advances three arguments contesting the sufficiency of Okamoto's disclosure and Petitioner's contentions regarding the Selectively Map Feature. Prelim. Resp. 36–49. First, Patent Owner argues that "Okamoto only discloses superimposing two-dimensional images, which is insufficient to render obvious the Selectively Map Feature." Prelim. Resp. 37. More particularly, Patent Owner argues that "Okamoto merely projects a two-dimensional representation of a three-dimensional object onto a screen and then superimposes the two-dimensional color data onto this two-dimensional representation." *Id.* at 38 (citing Ex. 1004 ¶¶ 31, 46). On this record, it is not clear to us whether Patent Owner's arguments correctly characterize Okamoto's disclosure. Nor is it clear to us whether Okamoto's disclosure differs from the Selectively Map Feature, as argued by Patent Owner. In any event, Patent Owner's "superimposing" argument does not address Okamoto's "seeking" and "storing" operations, which Petitioner relies upon to teach the Selectively Map Feature. Pet. 45–47 (citing Ex. 1004 ¶¶ 3, 12, 24, 33-42, Fig. 5; Ex. 1024 ¶¶ 93–97).

Second, Patent Owner disputes Petitioner's contention that Okamoto's "seeking" and "storing" operations teach the Selectively Map Feature.

Prelim. Resp. 40–45; Pet. 45–47. Although Patent Owner quotes Petitioner's contention, it omits a critical part, namely that the claim limitation is met "because [Okamoto's] seeking and storing involves the mapping of image *data to depth data on a pixel-by-pixel basis ('for each pixel').*" Pet. 46 (emphasis added); *cf.* Prelim. Resp. 42 (quoting the Petition, but omitting italicized text). Patent Owner argues that Okamoto is silent regarding any mapping or matching of color data and height data during the "seeking" and "storing" operations. Prelim. Resp. 42. But Patent Owner does not dispute Petitioner's contention that Okamoto teaches performing these operations "on a pixel-by-pixel basis." Pet. 46. Okamoto teaches using color data stored for each pixel in an XY plane and height data stored for each pixel in an XY plane to generate color three-dimensional display data. Ex. 1004 ¶¶ 12, 36, 37, 39, 40, 42, Fig. 5 (steps 103, 107, and 110); *see* Pet. 45–46 (citing these and other portions of Okamoto). At this stage, we understand the cited teachings of Okamoto to include matching the XY coordinates of the pixels. Patent Owner asserts that such matching is within "the plain and ordinary meaning" of the "selectively map" limitation, lending support to Petitioner's contention that Okamoto's pixel-by-pixel operations teach the Selectively Map Feature. Prelim. Resp. 40 (quoting the '433 patent's description of mapping color data to depth data by matching XY coordinates).

Third, Patent Owner argues Petitioner fails to show that Okamoto teaches the part of claim element 12.5 that recites: "selectively map . . . such that the resulting associated color of the structure portion is in focus relative to the structure portion for a plurality of distances in the depth direction." Prelim. Resp. 45–49. According to Patent Owner, Okamoto teaches

"refreshing color data only when its monochromatic laser light (not color of the sample) is in focus." *Id.* at 48. We find that one definition of "color" is "a component of light which is separated when it is reflected off of an object." YourDictionary, retrieved May 7, 2019 from http://www.yourdictionary.com/COLOR, Ex. 3001. As Patent Owner explains, the laser light measured in Okamoto is reflected off the sample. Prelim. Resp. 46 (quoting Ex. 1004 ¶ 22). Although Patent Owner does not specifically identify where the "in focus" feature is disclosed in the '433 patent, Patent Owner directs us to the following passage:

> [A] plurality of color images can be obtained, each based on a different z-position, so that *each illumination wavelength is used to illuminate in focus a different part (depth) of the object 26.* Advantageously, suitable algorithms may be used to form a composite color image of the set of color images associated with a particular z-scan of the object 26 to provide even more precise and accurate color image, than can then be combined with the depth data.

Id. at 8 (quoting Ex. 1001, 22:19–27) (emphasis added). "Each illumination wavelength" refers to monochromatic light, e.g., red, green, or blue. *See* Ex. 1001, 22:12–14 ("each one of the colored illuminations—red, green, blue and intermediate wavelengths—illuminates a progressively deeper part of the object along the z-direction"). In view of the foregoing, we are persuaded to institute review notwithstanding Patent Owner's argument that Okamoto's use of monochromatic laser light differs from the "in focus" limitation recited in claim element 12.5.

After considering Patent Owner's arguments, we are persuaded that Petitioner's arguments and evidence regarding the Selectively Map Feature (claim element 12.5) and Okamoto provide a sufficient basis on which to

institute review. Pet. 45–47 (citing Ex. 1004 ¶¶ 3, 12, 24, 33-42, Fig. 5; Ex. 1024 ¶¶ 93–97).

Next, Patent argues that "[n]o POSA would have combined [the] color imaging system of Okamoto's confocal microscope with Babayoff's handheld device (Ground 2)." Prelim. Resp. 49. Patent Owner advances a series of arguments challenging the sufficiency of Petitioner's contentions regarding motivation to combine and reasonable expectation of success as to Petitioner's Ground 2 (Babayoff in view of Okamoto). *Id.* at 49–57, 60–62.

For example, Patent Owner relies on a U.S. patent publication listing Petitioner as the applicant and assignee to argue that Petitioner previously represented that "Okamoto's desktop confocal microscope would not have been suitable for hand-held use." *Id.* at 50–51, 61, 67 (citing Ex. 1004 ¶ 18; Ex. 2003[11] ¶ 7; Ex. 2005,[12] 20:20–25). At this stage, it is not clear: (1) whether the statement in Esbech can be attributed to Petitioner; (2) whether Esbech's statement about Okamoto '373 is applicable to Okamoto (Ex. 1004); and (3) whether the '433 patent's use of a confocal imaging in a handheld device is subject to the same criticism as stated in Esbech. Aside from these questions, it is unclear how Esbech impacts Petitioner's Ground 2 to the extent it relies on Babayoff, rather than Okamoto, to teach an "image gathering member." Pet. 60–65. Esbech's criticism of Okamoto '373 appears to be limited to the confocal scanning technique (Ex. 2003 ¶ 7) and says little or nothing about whether a POSITA

---

[11] U.S. Patent Publication No. 2016/0022389 ("Esbech"). Esbech lists 3Shape A/S as the applicant and assignee. Ex. 2003.

[12] Japanese Publication No. JP 2004 029373 ("Okamoto '373").

would have integrated a non-confocal color imaging system and a processor for selectively mapping image data to depth data into a handheld device such as Babayoff's.

In a similar vein, Patent Owner argues that "the distance between the image sensor and the patient's teeth may constantly change during a scan" and "neither Petitioner nor its Declarant offers any opinion as to how Okamoto could have been integrated into Babayoff to solve this concern." Prelim. Resp. 55. Patent Owner's argument identifies a potential problem with using a confocal measuring technique in a handheld device. Petitioner's burden, however, is to show that a POSITA would have been motivated to combine the teachings of the prior art and would have had a reasonable expectation of successfully achieving the claimed invention. Petitioner does not need to show a reasonable expectation of solving every problem in the art, particularly not problems that are left unsolved by the claimed invention.

Accordingly, after considering Patent Owner's arguments, we are persuaded that Petitioner's arguments and evidence regarding motivation to combine and a reasonable expectation of success provide a sufficient basis on which to institute review. Pet. 70–74; Ex. 1006 ¶ 80, Fig. 4; Ex. 1007, 1:32–38, 2:18–20; Ex. 1008, 1:10–19, 2:29–30; Ex. 1024 ¶¶ 182–189; Ex. 1055, 4:26–27. We note that, at this stage, Patent Owner does not contest the sufficiency of Petitioner's arguments and evidence regarding motivation to combine and a reasonable expectation of success for Ground 1 (Okamoto in view of Babayoff).

3. Secondary Considerations

Patent Owner argues that Petitioner ignores known objective indicia of nonobviousness, including evidence of a long felt and unresolved need and commercial success. Prelim. Resp. 58–60. At this stage, Patent Owner's evidence of objective indicia of nonobviousness is limited to three journal articles[13] discussing iTero intraoral scanners, which Patent Owner asserts embody the challenged claims of the '433 patent. *Id.* at 58.

Evidence of secondary considerations must always be considered when presented to rebut an allegation of obviousness. *See, e.g.*, *In re Kao*, 639 F.3d 1057, 1067 (Fed. Cir. 2011) ("[W]hen secondary considerations are present, though they are not always dispositive, it is error not to consider them."). "For objective evidence of secondary considerations to be accorded substantial weight, its proponent must establish a nexus between the evidence and the merits of the claimed invention." *Kao*, 639 F.3d at 1068. There is a rebuttable presumption of nexus for objective considerations when the patentee shows that the asserted objective evidence is tied to a specific product, and that product is the invention disclosed and claimed in the challenged patent. *WBIP, LLC v. Kohler Co.*, 829 F.3d 1317, 1329 (Fed.

---

[13] Gary L. Henkel, *A Comparison of Fixed Prostheses Generated from Conventional vs. Digitally Scanned Dental Impressions*, Compendium of Continuing Education in Dentistry (August 2007), Ex. 2008;

Tim Mack, *Impressing Your Patients with Digital Technology*, Aesthetic Dentistry, Vol. 5, No. 4, pp. 18, 20 (2006), Ex. 2009;

Michael M. Mackay et al., *Acquisition of a Digital Intraoral Scanning Device: an Examination of Practice Volume Changes and the Economic Impact via an Interrupted Time Series Analysis*, J. of Clin. Dent., Vol. XXVIII (Supplement), pp. S1–S5 (2017), Ex. 2010.

Cir. 2016). If a patentee shows "the marketed product embodies the claimed features, . . . then a nexus is presumed and the burden shifts to the party asserting obviousness to present evidence to rebut the presumed nexus." *ClassCo, Inc. v. Apple, Inc.*, 838 F.3d 1214, 1222 (Fed. Cir. 2016) (quoting *Brown & Williamson Tobacco Corp. v. Philip Morris Inc.*, 229 F.3d 1120, 1130 (Fed. Cir. 2000)).

Before reaching a conclusion of obviousness or nonobviousness, we must consider and weigh the evidence relevant to all four *Graham* factors, including evidence of secondary considerations. *Apple Inc. v. Samsung Elecs. Co.*, 839 F.3d 1034, 1048 (Fed. Cir. 2016) (en banc) ("A determination of whether a patent claim is invalid as obvious under § 103 requires consideration of all four *Graham* factors, and it is error to reach a conclusion of obviousness until all those factors are considered.").

At this stage, however, it is premature to determine how much weight to give to Patent Owner's evidence of objective indicia, particularly when there is no showing that the iTero intraoral scanners discussed in the journal articles (Exs. 2008–2010) embody the challenged claims.

4. Conclusion

After considering the Petition and the Preliminary Response, we determine that Petitioner's arguments and evidence are sufficient to show a reasonable likelihood of prevailing on its contention that claims 12 and 14 of the '433 patent are unpatentable as obvious in view of Okamoto and Babayoff.

F. Discretion under §§ 314(a) and 325(d)

Patent Owner argues that we should deny institution pursuant to 35 U.S.C. §§ 314(a) and 325(d) because "[s]ubstantially the same art

(namely, Babayoff, Okamoto, and Pulli) were presented in the ITC action and were presented to and considered by the Office during the prosecution underlying the '433 Patent." Prelim. Resp. 62. Petitioner disagrees. Pet. 75–77.

1. Discretion under § 314(a)

Under § 314(a), we have discretion to deny a petition for *inter partes* review. *See* 35 U.S.C. § 314(a) (stating "[t]he Director may not authorize an *inter partes* review to be instituted unless . . . ."); *Cuozzo Speed Techs., LLC v. Lee*, 136 S. Ct. 2131, 2140 ("[T]he agency's decision to deny a petition is a matter committed to the Patent Office's discretion."); *Harmonic Inc. v. Avid Tech., Inc.*, 815 F.3d 1356, 1367 (Fed. Cir. 2016) ("First of all, the PTO is permitted, but never compelled, to institute an IPR proceeding." (citing 35 U.S.C. § 314(a))).

As explained in the Board's *Trial Practice Guide Update*, our discretion is informed by considerations identified in 35 U.S.C. § 316(b), including the "effect . . . on the economy, the integrity of the patent system, the efficient administration of the Office, and the ability of the Office to timely complete proceedings instituted under this chapter." Trial Practice Guide Update,[14] 9. In addition to listing factors relevant when the same patent is challenged in multiple petitions,[15] the *Trial Practice Guide Update* states "[t]here may be other reasons" where § 316(b) considerations "favor[]

---

[14] Available at: https://go.usa.gov/xU7GP. *See also* Office Patent Trial Practice Guide, August 2018 Update, 83 Fed. Reg. 39,989 (Aug. 13, 2018) (discussing and providing link to Trial Practice Guide Update).

[15] *See General Plastic Co., Ltd. v. Canon Kabushiki Kaisha*, IPR2016-01357, slip op. 16–17 (PTAB Sept. 6, 2017) (Paper 19) (precedential).

denying a petition even though some claims meet the threshold standards for institution" under § 314(a). *Id.* at 10. "This includes, for example, events in other proceedings related to the same patent, either at the Office, in district courts, or the ITC." *Id.*

Here, the parties dispute whether a discretionary denial of institution is appropriate in view of the ITC investigation. Pet. 76; Prelim. Resp. 63–65. Patent Owner asserts that "[t]he claims at issue in the ITC action are the same as the challenged claims in the present Petition." Prelim. Resp. 63. Patent Owner is wrong. Petitioner is correct that the Petition challenges a different set of claims than is at issue in the ITC investigation. Pet. 76 (citing Exs. 1058, 1059). As noted above, Petitioner challenges claims 12 and 14 of the '433 patent in this proceeding. In contrast, the evidence shows that only claim 12 was asserted at the ITC hearing and addressed in the parties' post-hearing ITC briefs. Ex. 2001, 0069; Ex. 2006, 0046.

Patent Owner argues that Petitioner relies on "substantially the same art" as it relied upon in the ITC action. Prelim. Resp. 29, 62. At the same time, however, Patent Owner concedes that Petitioner is now "relying primarily on Babayoff and Okamoto rather than a combination of Pulli, Babayoff, and Okamoto" as it did in the ITC. *Id.* at 64. Patent Owner relies on this change and an alleged change in position regarding Okamoto to accuse Petitioner of using Patent Owner's arguments in the ITC as a roadmap to fix weaknesses in its invalidity arguments. Prelim. Resp. 64–65 (citing Pet. 39–49; Ex. 2002, 0031–0032, 0041-0043; Ex. 2006, 0049–51). Patent Owner has not shown that Petitioner has changed positions regarding Okamoto. Both in the Petition and the ITC, Petitioner relies on Okamoto's embodiment in which the objective lens moves in the Z-direction, and the

sample stage is fixed. Pet. 40–44 (citing Ex. 1004 ¶ 19); Ex. 2006, 0027 (citing ¶ 19 of Okamoto). Although Petitioner does not rely on Pulli to the same extent as it did in the ITC (*compare* Pet. 49, *with* Ex. 2006, 0050-0051), we are not persuaded that Petitioner derived a substantial benefit from Patent Owner's ITC arguments regarding Pulli because, in both cases, Petitioner relies primarily on Babayoff and Okamoto.

Patent Owner argues that Petitioner's challenges are "similar" to its invalidity positions before the ITC and "[i]t would be an inefficient use of the Board's resources to institute trial and revisit these same issues." Prelim. Resp. 65. Petitioner, on the other hand, asserts this proceeding and the ITC investigation involve different issues, including different claim sets and different claim construction standards. Pet. 76. Petitioner also notes that any decision of the ITC involving patent issues has no preclusive effect in other forums, including the Delaware litigation. *Id*.

We do not give significant weight to Petitioner's assertion of differing claim construction standards because that difference exists in many cases filed before the effective date of the amendment to 37 C.F.R. § 42.100(b)[16] and is not tied to the particular facts and circumstances of this case. We agree with Petitioner, however, that differing claim sets is a factor that weighs against exercise of our discretion under § 314(a) to deny institution based on the ITC investigation. As discussed above, only one of the two claims challenged in the Petition was litigated in the ITC. We also give some weight to the lack of preclusive effect of any ITC determination of invalidity, but it is not the sole factor influencing our discretion. After

[16] *See supra* pp. 11 n.3.

considering both parties' arguments, we are persuaded that institution of *inter partes* review would not be an inefficient use of the Board's resources under the facts and circumstances of this case.

2. Discretion under § 325(d)

Under § 325(d), we have discretion to deny a petition that presents the same or substantially the same prior art or arguments as previously presented to the Office. 35 U.S.C. § 325(d). In evaluating whether the factual predicate under § 325(d) is met, the Board has considered a number of non-exclusive factors, including, for example:

> (a) the similarities and material differences between the asserted art and the prior art involved during examination;
>
> (b) the cumulative nature of the asserted art and the prior art evaluated during examination;
>
> (c) the extent to which the asserted art was evaluated during examination, including whether the prior art was the basis for rejection;
>
> (d) the extent of the overlap between the arguments made during examination and the manner in which Petitioner relies on the prior art or Patent Owner distinguished the prior art;
>
> (e) whether Petitioner has pointed out sufficiently how the Examiner erred in its consideration of the asserted prior art; and
>
> (f) the extent to which additional evidence and facts presented in the Petition warrant reconsideration of the asserted prior art or arguments.

Becton, Dickinson and Co. v. B. Braun Melsungen AG, IPR2017-01586, slip op. at 17–18 (PTAB Dec. 15, 2017) (Paper 8) (informative) ("the *Becton Dickinson* factors"). These factors were adopted and applied in *NHK Spring Co. v. Intri-Plex Technologies, Inc.*, Case IPR2018-00752, slip op. at 11–12 (PTAB Sept. 12, 2018) (Paper 8) (precedential).

Becton Dickinson factors (a)–(d) relate to whether—and to what extent—the Examiner considered and relied upon the prior art and arguments asserted in the Petition. Patent Owner argues that "both Babayoff and Okamoto were presented in an Information Disclosure Statement ('IDS') and considered by the Examiner during prosecution" of the '228 patent. Prelim. Resp. 66 (citing Ex. 2012, 137–138). In addition, Patent Owner argues that Babayoff is "described in the 'Background of the Invention' of the '433 Patent and incorporated by reference." *Id.*

Patent Owner concedes that "the Office did not specifically reject the claims based on either Okamoto and/or Babayoff alone or in combination." *Id.* at 67. Petitioner acknowledges that a reference corresponding to Babayoff was applied in combination with Mueller[17] during prosecution of another related application. Pet. 77 (citing Ex. 1021, 61–62, the file history for U.S. Patent No. 7,319,529). Patent Owner does not dispute Petitioner's assertion that this prosecution history does not warrant denial of institution. Pet. 77. Although Patent Owner faults Petitioner for failing to explain how the Office erred in evaluating Babayoff and Okamoto (Prelim. Resp. 67), the evidence fails to show that this combination of references was ever evaluated by the Office.

Becton Dickinson factors (e) and (f) look to the Petition and whether Petitioner has made a case for reconsidering the asserted prior art. Here, on the current record, there is no evidence that Babayoff and Okamoto were substantively considered by the Examiner during prosecution. Even if Babayoff and Okamoto were made of record during prosecution of the '228

---

[17] U.S. Patent No. 7,098,435, issued August 29, 2006, Ex. 1054.

patent as asserted by Patent Owner, for the reasons discussed in the section II.E. above, we determine Petitioner has demonstrated a reasonable likelihood that the Examiner erred in failing to reject the claims over the combination of Babayoff and Okamoto and that reconsideration of patentability over these references is warranted.

Accordingly, for all of the foregoing reasons, we decline to exercise our discretion to deny review under §§ 314(a) or 325(d).

III. CONCLUSION

For the reasons stated above, we institute an *inter partes* review as set forth in the Order. At this stage of the proceeding, the Board has not made a final determination with respect to the patentability of any challenged claim or any underlying factual or legal issues.

IV. ORDER

It is

ORDERED that, pursuant to 35 U.S.C. § 314(a), an *inter partes* review of claims 12 and 14 of the '433 patent is instituted with respect to the grounds of unpatentability asserted in the Petition; and

FURTHER ORDERED that pursuant to 35 U.S.C. § 314(a), *inter partes* review of the '433 patent is hereby instituted commencing on the entry date of this Order, and pursuant to 35 U.S.C. § 314(c) and 37 C.F.R. § 42.4, notice is hereby given of the institution of trial.

PETITIONER:

Todd R. Walters
Roger H. Lee
Andrew R. Cheslock
Mythili Markowski
Stephany G. Small
todd.walters@bipc.com
roger.lee@bipc.com
andrew.cheslock@bipc.com
mythili.markowski@bipc.com
stephany.small@bipc.com

PATENT OWNER:

Robert G. Sterne
Jason D. Eisenberg
Salvador M. Bezos
rsterne-PTAB@sternekessler.com
jasone-PTAB@sternekessler.com
sbezos-PTAB@sternekessler.com